SYSTEM CERTIFICATION
ISO 9001:2000 SGS

NET®
BEARING UNITS

www.bacdannet.tk

Miniature Bearing

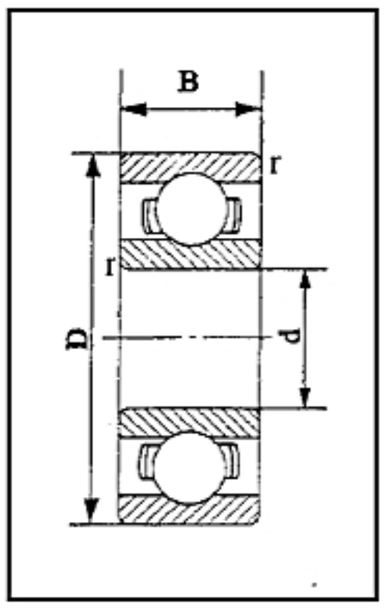

OPEN

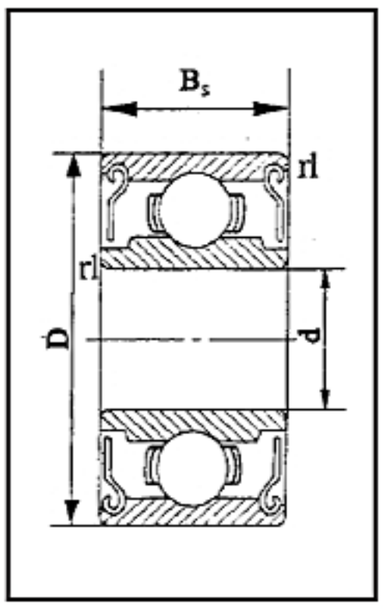

ZZ & 2RS

Miniature Bearing									
Bearing No.	d (mm)	D (mm)	B (mm)	Bs (mm)	Weight (g)	Bearing No.			
673	3	6	2	2.5	0.20	673Z	673ZZ		
683	3	7	2	3	0.32	683Z	683ZZ		
693	3	8	3	4	0.61	693Z	693ZZ		
603	3	9	3	5	0.87	603Z	603ZZ		
623	3	10	4	4	1.65	623Z	623ZZ		
674	4	7	2	2.5	0.22	674Z	674ZZ		
684	4	9	2.5	4	0.63	684Z	684ZZ		
694	4	11	4	4	1.70	694Z	694ZZ		
604	4	12	4	4	2.25	604Z	604ZZ	604RS	604-2RS
624	4	13	5	5	3.03	624Z	624ZZ	624RS	624-2RS
634	4	16	5	5	5.24	634Z	634ZZ	634RS	634-2RS
675	5	8	2	2.5	0.26	675Z	675ZZ		
685	5	11	3	5	1.20	685Z	685ZZ	685RS	685-2RS
695	5	13	4	4	2.45	695Z	695ZZ	695RS	695-2RS
605	5	14	5	5	3.54	605Z	605ZZ	605RS	605-2RS
625	5	16	5	5	4.95	625Z	625ZZ	625RS	625-2RS
635	5	19	6	6	8.56	635Z	635ZZ	635RS	635-2RS
676	6	10	2.5	3	0.56	676Z	676ZZ	676RS	676-2RS
686	6	13	3.5	5	1.91	686Z	686ZZ	686RS	686-2RS
696	6	15	5	5	3.88	696Z	696ZZ	696RS	696-2RS
606	6	17	6	6	5.97	606Z	606ZZ	606RS	606-2RS
626	6	19	6	6	8.15	626Z	626ZZ	626RS	626-2RS
636	6	22	7	7	14.00	636Z	636ZZ	636RS	636-2RS
677	7	11	2.5	3	0.62	677Z	677ZZ	677RS	677-2RS
687	7	14	3.5	5	2.10	687Z	687ZZ	687RS	687-2RS
697	7	17	5	5	5.26	697Z	697ZZ	697RS	697-2RS
607	7	19	6	6	7.67	607Z	607ZZ	607RS	607-2RS
627	7	22	7	7	12.70	627Z	627ZZ	627RS	627-2RS
637	7	26	9	9	24.00	637Z	637ZZ	637RS	637-2RS
678	8	12	2.5	3.5	0.71	678Z	678ZZ	678RS	678-2RS
688	8	16	4	5	3.25	688Z	688ZZ	688RS	688-2RS
698	8	19	6	6	7.23	698Z	698ZZ	698RS	698-2RS
608	8	22	7	7	12.10	608Z	608ZZ	608RS	608-2RS
628	8	24	8	8	17.20	628Z	628ZZ	628RS	628-2RS
638	8	28	9	9	28.30	638Z	638ZZ	638RS	638-2RS

Miniature Bearing

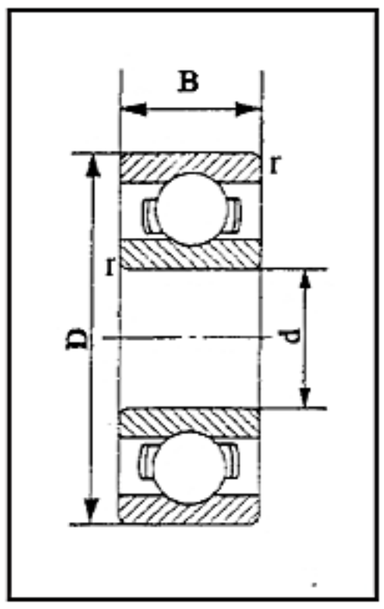

OPEN

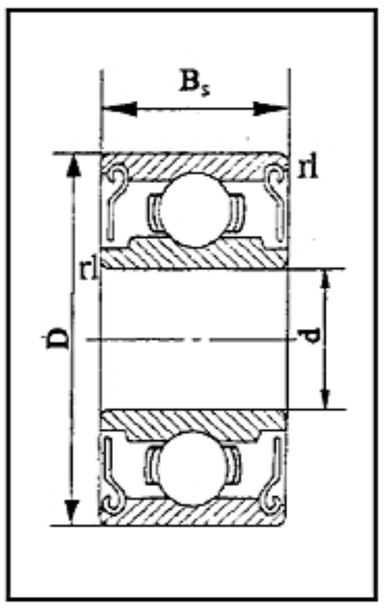

ZZ & 2RS

Miniature Bearing									
Bearing No.	d (mm)	D (mm)	B (mm)	Bs (mm)	Weight (g)	Bearing No.			
679	9	14	3	4.5	3.05	679Z	679ZZ	679RS	679-2RS
689	9	17	4	5	3.53	689Z	689ZZ	689RS	689-2RS
699	9	20	6	6	8.45	699Z	699ZZ	699RS	699-2RS
609	9	24	7	7	14.50	609Z	609ZZ	609RS	609-2RS
629	9	26	8	8	19.50	629Z	629ZZ	629RS	629-2RS
639	9	30	10	10	36.50	639Z	639ZZ	639RS	639-2RS
672	2	4	1.2	2	0.06	672Z	672ZZ		
682	2	5	1.5	2.3	0.12	682Z	682ZZ		
692	2	6	2.3	3	0.28	692Z	692ZZ		
602	2	7	2.8	3.5	0.51	602Z	602ZZ		
67/2.5	2.5	5	1.5	2.3	0.11	67/2.5Z	67/2.5ZZ		
68/2.5	2.5	6	1.8	2.6	0.23	68/2.5Z	68/2.5ZZ		
69/2.5	2.5	7	2.5	3.5	0.41	69/2.5Z	69/2.5ZZ		
60/2.5	2.5	8	2.8	4	0.63	60/2.5Z	60/2.5ZZ		
R144	3.175	6.350	2.380	2.779	0.25	R144Z	R144ZZ		
R154	3.175	7.938	2.779	2.779	0.55	R154Z	R154ZZ		
R2.5	3.175	7.938	2.779	3.571	0.55	R2.5Z	R2.5ZZ		
R2.6	3.175	9.525	2.779	3.571	0.96	R2.6Z	R2.6ZZ		
R164	3.175	9.525	2.380	2.380	0.94	R164Z	R164ZZ		
R2	3.175	9.525	2.380	3.967	1.36	R2Z	R2ZZ		
R174	3.175	10.414	2.779	2.779	1.28	R174Z	R174ZZ		
R184	3.175	12.700	2.779	2.779	1.44	R184Z	R184ZZ		
R2A	3.175	12.700	4.366	4.366	3.3	R2AZ	R2AZZ		
R155	3.967	7.938	2.779	3.175	0.51	R155Z	R155ZZ		
R156	4.762	7.938	2.779	3.175	0.39	R156Z	R156ZZ		
R166	4.762	9.525	3.175	3.175	0.81	R166Z	R166ZZ		
R186	4.762	12.70	2.779	3.967	1.98	R186Z	R186ZZ		
R3	4.762	12.70	3.978	4.978	2.21	R3Z	R3ZZ		
R3A	4.762	15.88	4.978	4.978	2.79	R3AZ	R3AZZ		
R168	6.35	9.525	3.175	3.175	0.57	R168Z	R168ZZ	R168RS	R168-2RS
R188	6.35	12.70	3.175	4.762	1.53	R188Z	R188ZZ	R188RS	R188-2RS
R4	6.35	15.88	4.978	4.978	4.46	R4Z	R4ZZ	R4RS	R4-2RS
R4A	6.35	19.05	5.558	7.142	7.48	R4AZ	R4AZZ	R4ARS	R4A-2RS
R1810	7.938	12.7	3.967	3.967	1.56	R1810Z	R1810ZZ	R1810RS	R1810-2RS
R6	9.525	22.23	5.558	7.142	9.02	R6Z	R6ZZ	R6RS	R6-2RS

Deep Groove Ball Bearing

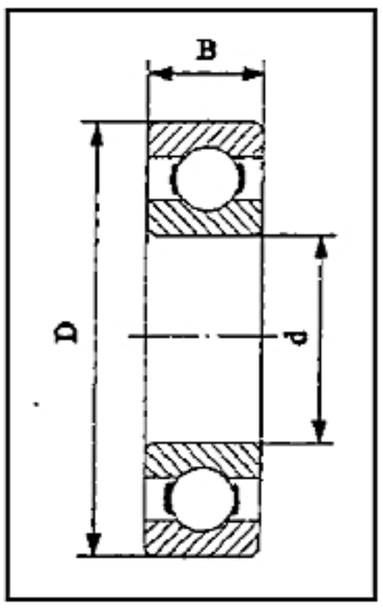

6000

Deep Groove Ball Bearing									
Bearing No.	d X D X B (mm)	Weight (kg)	Bearing No.						
6000	10 X 26 X 8	0.019	6000Z	6000ZZ	6000RS	6000-2RS	6000N	6000ZN	
6001	12 X 28 X 8	0.022	6001Z	6001ZZ	6001RS	6001-2RS	6001N	6001ZN	
6002	15 X 32 X 9	0.03	6002Z	6002ZZ	6002RS	6002-2RS	6002N	6002ZN	
6003	17 X 35 X 10	0.039	6003Z	6003ZZ	6003RS	6003-2RS	6003N	6003ZN	
6004	20 X 42 X 12	0.069	6004Z	6004ZZ	6004RS	6004-2RS	6004N	6004ZN	
6005	25 X 47 X 12	0.08	6005Z	6005ZZ	6005RS	6005-2RS	6005N	6005ZN	
6006	30 X 55 X 13	0.12	6006Z	6006ZZ	6006RS	6006-2RS	6006N	6006ZN	
6007	35 X 62 X 14	0.16	6007Z	6007ZZ	6007RS	6007-2RS	6007N	6007ZN	
6008	40 X 68 X 15	0.19	6008Z	6008ZZ	6008RS	6008-2RS	6008N	6008ZN	
6009	45 X 75 X 16	0.25	6009Z	6009ZZ	6009RS	6009-2RS	6009N	6009ZN	
6010	50 X 80 X 16	0.26	6010Z	6010ZZ	6010RS	6010-2RS	6010N	6010ZN	
6011	55 X 90 X 18	0.39	6011Z	6011ZZ	6011RS	6011-2RS	6011N	6011ZN	
6012	60 X 95 X 18	0.42	6012Z	6012ZZ	6012RS	6012-2RS	6012N	6012ZN	
6013	65 X 100 X 18	0.44	6013Z	6013ZZ	6013RS	6013-2RS	6013N	6013ZN	
6014	70 X 110 X 20	0.60	6014Z	6014ZZ	6014RS	6014-2RS	6014N	6014ZN	
6015	75 X 115 X 20	0.64	6015Z	6015ZZ	6015RS	6015-2RS	6015N	6015ZN	
6016	80 X 125 X 22	0.85	6016Z	6016ZZ	6016RS	6016-2RS	6016N	6016ZN	
6017	85 X 130 X 22	0.89	6017Z	6017ZZ	6017RS	6017-2RS	6017N	6017ZN	
6018	90 X 140 X 24	1.15	6018Z	6018ZZ	6018RS	6018-2RS	6018N	6018ZN	
6019	95 X 145 X 24	1.20	6019Z	6019ZZ	6019RS	6019-2RS	6019N	6019ZN	
6020	100 X 150 X 24	1.25	6020Z	6020ZZ	6020RS	6020-2RS	6020N	6020ZN	
6021	105 X 160 X 26	1.60	6021Z	6021ZZ	6021RS	6021-2RS	6021N	6021ZN	
6022	110 X 170 X 28	1.95	6022Z	6022ZZ	6022RS	6022-2RS	6022N	6022ZN	
6024	120 X 180 X 28	2.05	6024Z	6024ZZ	6024RS	6024-2RS	6024N	6024ZN	
6026	130 X 200 X 33	3.15	6026Z	6026ZZ	6026RS	6026-2RS	6026N	6026ZN	
6028	140 X 210 X 33	3.35	6028Z	6028ZZ	6028RS	6028-2RS	6028N	6028ZN	
6030	150 X 225 X 35	4.80	6030Z	6030ZZ	6030RS	6030-2RS	6030N	6030ZN	
6032	160 X 240 X 38	5.90					6032N		
6034	170 X 260 X 42	7.90					6034N		
6036	180 X 280 X 46	10.05					6036N		
6038	190 X 290 X 46	11.00					6038N		
6040	200 X 310 X 51	14.00					6040N		
6044	220 X 340 X 56	18.50					6044N		

Deep Groove Ball Bearing

6200
Series

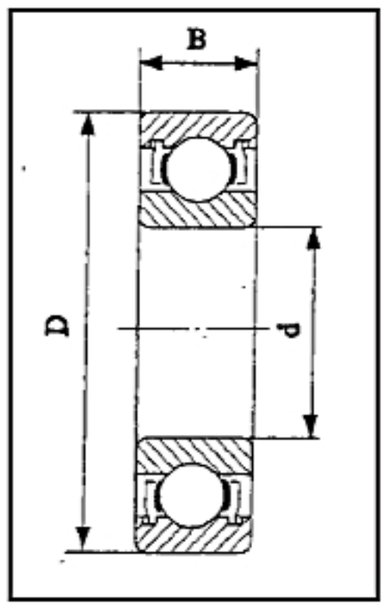

6000-2Z

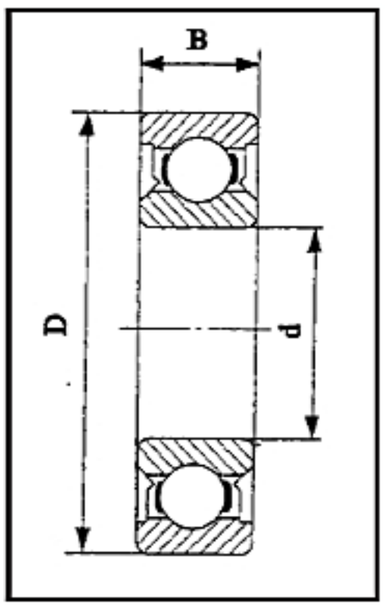

6000-2RS

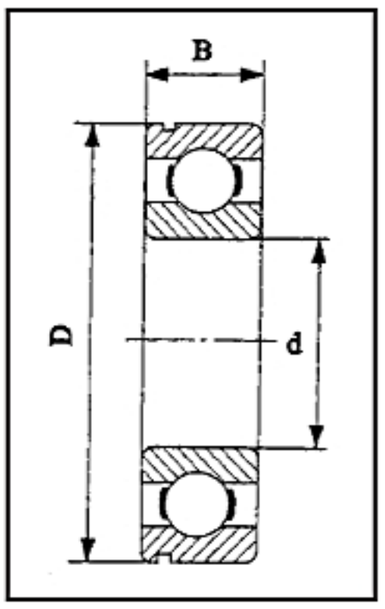

6000N

Deep Groove Ball Bearing									
Bearing No.	d X D X B (mm)	Weight (kg)	Bearing No.						
6200	10 X 30 X 9	0.032	6200Z	6200ZZ	6200RS	6200-2RS	6200N	6200ZN	
6201	12 X 32 X 10	0.037	6201Z	6201ZZ	6201RS	6201-2RS	6201N	6201ZN	
6202	15 X 33 X 11	0.045	6202Z	6202ZZ	6202RS	6202-2RS	6202N	6202ZN	
6203	17 X 40 X 12	0.065	6203Z	6203ZZ	6203RS	6203-2RS	6203N	6203ZN	
6204	20 X 47 X 14	0.110	6204Z	6204ZZ	6204RS	6204-2RS	6204N	6204ZN	
6205	25 X 52 X 15	0.130	6205Z	6205ZZ	6205RS	6205-2RS	6205N	6205ZN	
6206	30 X 62 X 16	0.200	6206Z	6206ZZ	6206RS	6206-2RS	6206N	6206ZN	
6207	35 X 72 X 17	0.290	6207Z	6207ZZ	6207RS	6207-2RS	6207N	6207ZN	
6208	40 X 80 X 18	0.370	6208Z	6208ZZ	6208RS	6208-2RS	6208N	6208ZN	
6209	45 X 85 X 19	0.410	6209Z	6209ZZ	6209RS	6209-2RS	6209N	6209ZN	
6210	50 X 90 X 20	0.460	6210Z	6210ZZ	6210RS	6210-2RS	6210N	6210ZN	
6211	55 X 100 X 21	0.610	6211Z	6211ZZ	6211RS	6211-2RS	6211N	6211ZN	
6212	60 X 110 X 22	0.780	6212Z	6212ZZ	6212RS	6212-2RS	6212N	6212ZN	
6213	65 X 120 X 23	0.990	6213Z	6213ZZ	6213RS	6213-2RS	6213N	6213ZN	
6214	70 X 125 X 24	1.050	6214Z	6214ZZ	6214RS	6214-2RS	6214N	6214ZN	
6215	75 X 130 X 25	1.200	6215Z	6215ZZ	6215RS	6215-2RS	6215N	6215ZN	
6216	80 X 140 X 26	1.400	6216Z	6216ZZ	6216RS	6216-2RS	6216N	6216ZN	
6217	85 X 150 X 28	1.800	6217Z	6217ZZ	6217RS	6217-2RS	6217N	6217ZN	
6218	90 X 160 X 30	2.150	6218Z	6218ZZ	6218RS	6218-2RS	6218N	6218ZN	
6219	95 X 170 X 32	2.600	6219Z	6219ZZ	6219RS	6219-2RS	6219N	6219ZN	
6220	100 X 180 X 34	3.150	6220Z	6220ZZ	6220RS	6220-2RS	6220N	6220ZN	
6222	110 X 200 X 38	4.350	6222Z	6222ZZ	6222RS	6222-2RS	6222N	6222ZN	
6224	120 X 215 X 40	5.150	6224Z	6224ZZ	6224RS	6224-2RS	6224N	6224ZN	
6226	130 X 230 X 40	5.800	6226Z	6226ZZ	6226RS	6226-2RS	6226N	6226ZN	
6228	140 X 250 X 42	7.450	6228Z	6228ZZ	6228RS	6228-2RS	6228N	6228ZN	
6230	150 X 270 X 45	9.400	6230Z	6230ZZ	6230RS	6230-2RS	6230N	6230ZN	
6232	160 X 290 X 48	14.500							
6234	170 X 310 X 52	17.500							
6236	180 X 320 X 52	18.500							
6238	190 X 340 X 55	23.000							
6240	200 X 360 X 58	28.000							
6244	220 X 400 X 65	37.000							

Deep Groove Ball Bearing

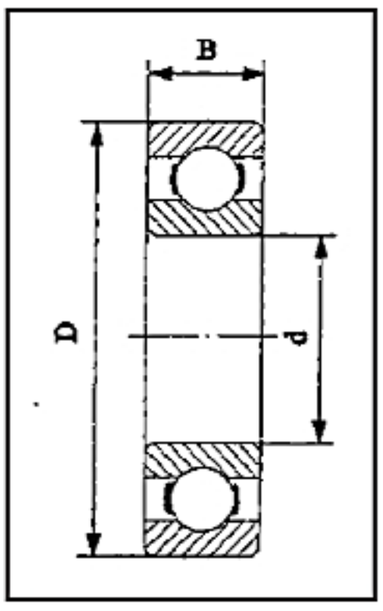

6000

Deep Groove Ball Bearing							
Bearing No.	d X D X B (mm)	Weight (kg)	Bearing No.				
6300	10 X 35 X 11	0.053	6300Z	6300ZZ	6300RS	6300-2RS	6300N
6301	12 X 37 X 12	0.060	6301Z	6301ZZ	6301RS	6301-2RS	6301N
6302	15 X 42 X 13	0.082	6302Z	6302ZZ	6302RS	6302-2RS	6302N
6303	17 X 47 X 14	0.120	6303Z	6303ZZ	6303RS	6303-2RS	6303N
6304	20 X 52 X 15	0.140	6304Z	6304ZZ	6304RS	6304-2RS	6304N
6305	25 X 62 X 17	0.230	6305Z	6305ZZ	6305RS	6305-2RS	6305N
6306	30 X 72 X 19	0.350	6306Z	6306ZZ	6306RS	6306-2RS	6306N
6307	35 X 80 X 21	0.460	6307Z	6307ZZ	6307RS	6307-2RS	6307N
6308	40 X 90 X 23	0.630	6308Z	6308ZZ	6308RS	6308-2RS	6308N
6309	45 X 100 X 25	0.830	6309Z	6309ZZ	6309RS	6309-2RS	6309N
6310	50 X 130 X 27	1.050	6310Z	6310ZZ	6310RS	6310-2RS	6310N
6311	55 X 120 X 29	1.350	6311Z	6311ZZ	6311RS	6311-2RS	6311N
6312	60 X 130 X 31	1.700	6312Z	6312ZZ	6312RS	6312-2RS	6312N
6313	65 X 140 X 33	2.100	6313Z	6313ZZ	6313RS	6313-2RS	6313N
6314	70 X 150 X 35	2.500	6314Z	6314ZZ	6314RS	6314-2RS	6314N
6315	75 X 160 X 37	3.000	6315Z	6315ZZ	6315RS	6315-2RS	6315N
6316	80 X 170 X 39	3.600	6316Z	6316ZZ	6316RS	6316-2RS	6316N
6317	85 X 180 X 41	4.250	6317Z	6317ZZ	6317RS	6317-2RS	6317N
6318	90 X 190 X 43	4.900	6318Z	6318ZZ	6318RS	6318-2RS	6318N
6319	95 X 200 X 45	5.650	6319Z	6319ZZ	6319RS	6319-2RS	6319N
6320	100 X 215 X 47	7.000	6320Z	6320ZZ	6320RS	6320-2RS	6320N
6321	105 X 225 X 49	8.250	6321Z	6321ZZ	6321RS	6321-2RS	6321N
6322	110 X 240 X 50	9.550	6322Z	6322ZZ	6322RS	6322-2RS	6322N
6324	120 X 260 X 55	14.500	6324Z	6324ZZ	6324RS	6324-2RS	6324N
6326	130 X 280 X 58	18.000	6326Z				
6328	140 X 300 X 62	22.000	6328Z				
6330	150 X 320 X 65	26.000	6330Z				

Deep Groove Ball Bearing

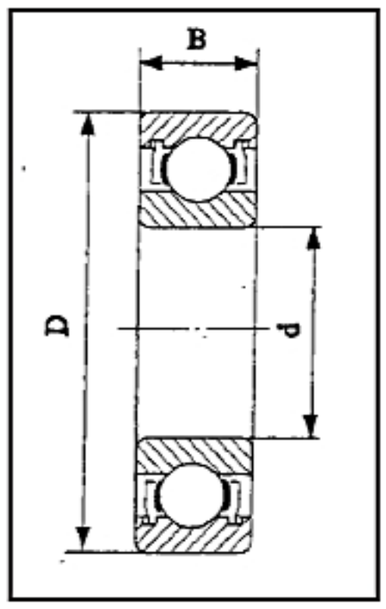

6000-2Z

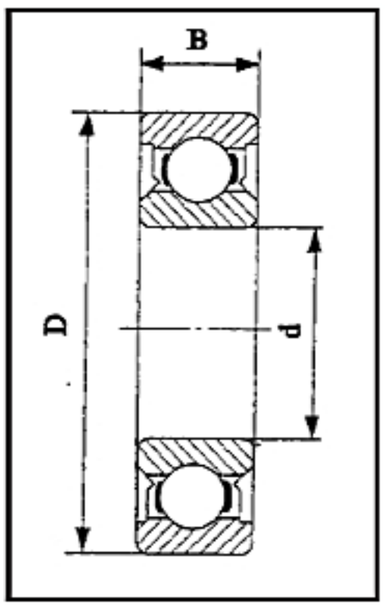

6000-2RS

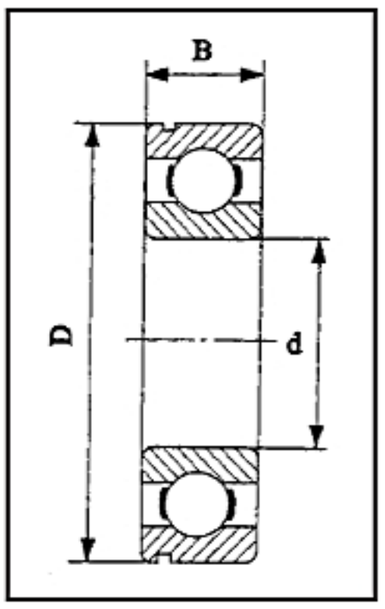

6000N

Deep Groove Ball Bearing

Bearing No.	d X D X B (mm)	Weight (kg)	Bearing No.			
6403	17 X 62 X 17	0.270	6403Z	6403ZZ	6403RS	6403-2RS
6404	20 X 72 X 19	0.400	6404Z	6404ZZ	6404RS	6404-2RS
6405	25 X 80 X 21	0.530	6405Z	6405ZZ	6405RS	6405-2RS
6406	30 X 90 X 23	0.740	6406Z	6406ZZ	6406RS	6406-2RS
6407	35 X 100 X 25	0.950	6407Z	6407ZZ	6407RS	6407-2RS
6408	40 X 110 X 27	1.250	6408Z	6408ZZ	6408RS	6408-2RS
6409	45 X 120 X 29	1.550	6409Z	6409ZZ	6409RS	6409-2RS
6410	50 X 130 X 31	1.900	6410Z	6410ZZ	6410RS	6410-2RS
6411	55 X 140 X 33	2.300	6411Z	6411ZZ	6411RS	6411-2RS
6412	60 X 150 X 35	2.750	6412Z	6412ZZ	6412RS	6412-2RS
6413	65 X 160 X 37	3.300	6413Z	6413ZZ	6413RS	6413-2RS
6414	70 X 180 X 42	4.850	6414Z	6414ZZ	6414RS	6414-2RS
6415	75 X 190 X 45	6.800				
6416	80 X 200 X 48	8.000				

Bearing No.	d X D X B (mm)	Weight (kg)	Bearing No.	d X D X B (mm)	Weight (kg)	
16002	15 X 32 X 8	0.025	16019	95 X 145 X 16	0.890	
16003	17 X 35 X 8	0.032	16020	100 X 160 X 19	0.910	
16004	20 X 42 X 8	0.050	16021	105 X 170 X 18	1.200	
16005	25 X 47 X 8	0.060	16022	110 X 180 X 19	1.450	
16006	30 X 55 X 9	0.085	16024	120 X 180 X 19	1.600	
16007	35 X 62 X 9	0.110	16026	130 X 200 X 22	2.350	
16008	40 X 68 X 9	0.130	16028	140 X 210 X 22	2.500	
16009	45 X 75 X 10	0.170	16030	150 X 225 X 24	3.150	
16010	50 X 80 X 10	0.180	16032	160 X 240 X 25	3.700	
16011	55 X 90 X 11	0.260				
16012	60 X 95 X 11	0.280				
16013	65 X 100 X 11	0.300				
16014	70 X 110 X 13	0.430				
16015	75 X 115 X 13	0.460				
16016	80 X 125 X 14	0.600				
16017	85 X 130 X 14	0.630				
16018	90 X 140 X 16	0.850				

Deep Groove Ball Bearing

6800 - 6900
Series

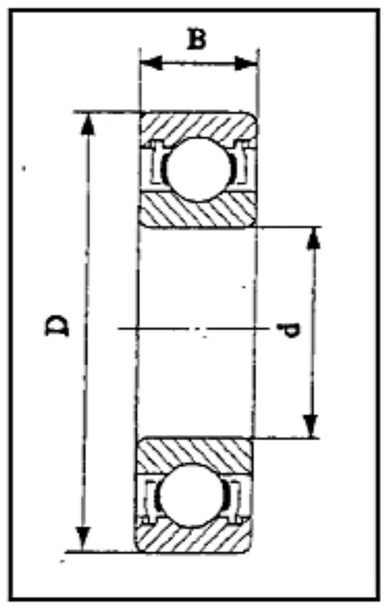

6000-2Z

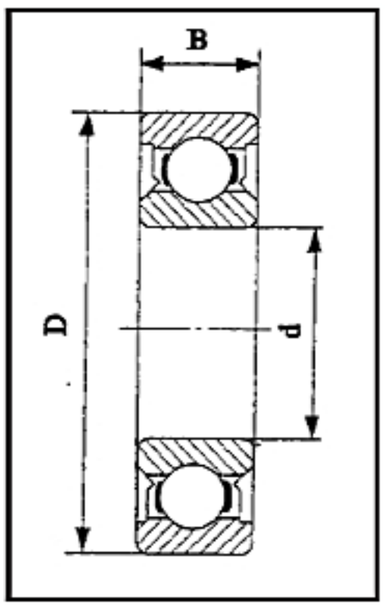

6000-2RS

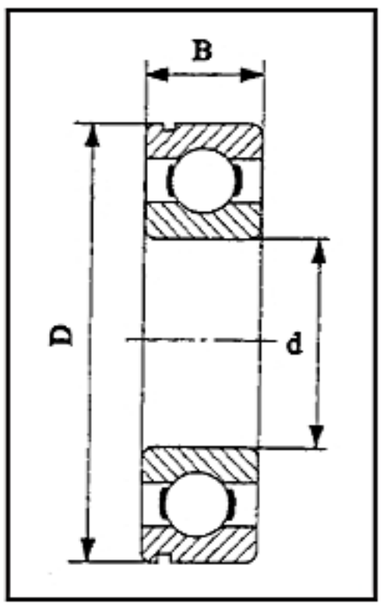

6000N

Deep Groove Ball Bearing						
Bearing No.	d X D X B (mm)	Weight (kg)	Bearing No.			
6900	10 X 22 X 6	0.010	6900Z	6900ZZ	6900RS	6900-2RS
6901	12 X 24 X 6	0.011	6901Z	6901ZZ	6901RS	6901-2RS
6902	15 X 28 X 7	0.016	6902Z	6902ZZ	6902RS	6902-2RS
6903	17 X 30 X 7	0.018	6903Z	6903ZZ	6903RS	6903-2RS
6904	20 X 37 X 9	0.038	6904Z	6904ZZ	6904RS	6904-2RS
6905	25 X 42 X 9	0.045	6905Z	6905ZZ	6905RS	6905-2RS
6906	30 X 47 X 9	0.051	6906Z	6906ZZ	6906RS	6906-2RS
6907	35 X 55 X 10	0.080	6907Z	6907ZZ	6907RS	6907-2RS
6908	40 X 62 X 12	0.120	6908Z	6908ZZ	6908RS	6908-2RS
6909	45 X 68 X 12	0.140	6909Z	6909ZZ	6909RS	6909-2RS
6910	50 X 72 X 12	0.140	6910Z	6910ZZ	6910RS	6910-2RS
6912	60 X 85 X 13	0.200	6912Z	6912ZZ	6912RS	6912-2RS
6913	65 X 90 X 13	0.220	6913Z	6913ZZ	6913RS	6913-2RS
6914	70 X 110 X 16	0.350	6914Z	6914ZZ	6914RS	6914-2RS
Bearing No.	d X D X B (mm)	Weight (kg)	Bearing No.			
6800	10 X 19 X 5	0.0055	6800Z	6800ZZ	6800RS	6800-2RS
6801	12 X 21 X 5	0.0063	6801Z	6801ZZ	6801RS	6801-2RS
6802	15 X 24 X 5	0.0074	6802Z	6802ZZ	6802RS	6802-2RS
6803	17 X 26 X 5	0.0082	6803Z	6803ZZ	6803RS	6803-2RS
6804	20 X 32 X 7	0.0180	6804Z	6804ZZ	6804RS	6804-2RS
6805	25 X 32 X 7	0.0220	6805Z	6805ZZ	6805RS	6805-2RS
6806	30 X 42 X 7	0.0270	6806Z	6806ZZ	6806RS	6806-2RS
6807	35 X 47 X 7	0.0300	6807Z	6807ZZ	6807RS	6807-2RS
6808	40 X 52 X 7	0.0340	6808Z	6808ZZ	6808RS	6808-2RS
6809	45 X 58 X 7	0.0400	6809Z	6809ZZ	6809RS	6809-2RS
6810	50 X 65 X 7	0.0520	6810Z	6810ZZ	6810RS	6810-2RS
6812	60 X 78 X 10	0.1100	6812Z	6812ZZ	6812RS	6812-2RS
6813	65 X 85 X 10	0.1300	6813Z	6813ZZ	6813RS	6813-2RS
6814	70 X 90 X 10	0.1400	6814Z	6814ZZ	6814RS	6814-2RS

* 61900/61800 series as same as 6900/6800 series

Double Row Angular Contact Ball Bearing

5200 Series

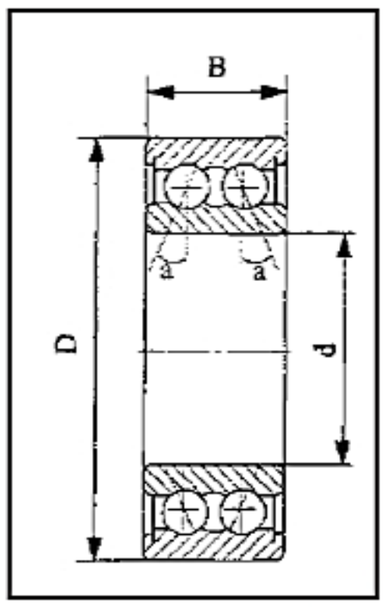

5000
(3000)

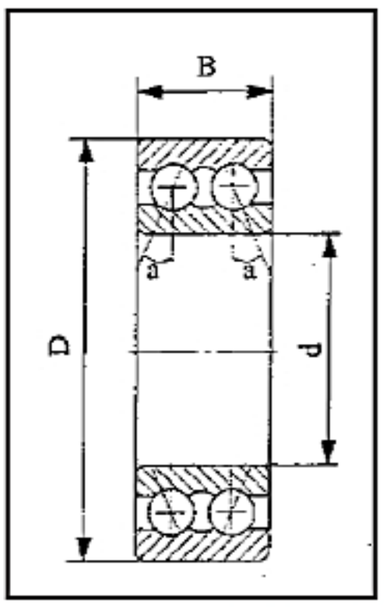

5000ZZ (3000ZZ)
5000-2RS (3000-2RS)

Double Row Angular Contact Ball Bearing

Bearing No.			d X D X B (mm)	Weight (kg)	Bearing No.			d X D X B (mm)	Weight (kg)
5200	5200ZZ	5200-2RS	10 X 30 X 14.3	0.049					
5201	5201ZZ	5201-2RS	12 X 32 X 15.9	0.057					
5202	5202ZZ	5202-2RS	15 X 35 X 15.9	0.064	5302	5302ZZ	5302-2RS	15 X 42 X 19	0.132
5203	5203ZZ	5203-2RS	17 X 40 X 17.5	0.096	5303	5303ZZ	5303-2RS	17 X 47 X 22.2	0.181
5204	5204ZZ	5204-2RS	20 X 47 X 17.5	0.153	5304	5304ZZ	5304-2RS	20 X 52 X 22.2	0.217
5205	5205ZZ	5205-2RS	25 X 52 X 20.6	0.175	5305	5305ZZ	5305-2RS	25 X 62 X 25.4	0.362
5206	5206ZZ	5206-2RS	30 X 62 X 23.8	0.286	5306	5306ZZ	5306-2RS	30 X 72 X 30.2	0.553
5207	5207ZZ	5207-2RS	35 X 72 X 27	0.436	5307	5307ZZ	5307-2RS	35 X 80 X 34.9	0.766
5208	5208ZZ	5208-2RS	40 X 80 X 30.2	0.590	5308	5308ZZ	5308-2RS	40 X 90 X 36.5	1.010
5209	5209ZZ	5209-2RS	45 X 85 X 30.2	0.640	5309	5309ZZ	5309-2RS	45 X 100 X 39.7	1.340
5210	5210ZZ	5210-2RS	50 X 90 X 30.2	0.689	5310	5310ZZ	5310-2RS	50 X 110 X 44.4	1.810
5211	5211ZZ	5211-2RS	55 X 100 X 33.3	0.986	5311	5311ZZ	5311-2RS	55 X 120 X 49.2	2.320
5212	5212ZZ	5212-2RS	60 X 110 X 36.5	1.270	5312	5312ZZ	5312-2RS	60 X 130 X 54	3.050
5213	5213ZZ	5213-2RS	65 X 120 X 38.1	1.570	5313	5313ZZ	5313-2RS	65 X 140 X 58.7	3.960
5214	5214ZZ	5214-2RS	70 X 125 X 39.7	1.800	5314	5314ZZ	5314-2RS	70 X 150 X 63.5	4.740

* 3000 series Dimension same as 5000 series

Double Row Ball Bearing

4200 Series

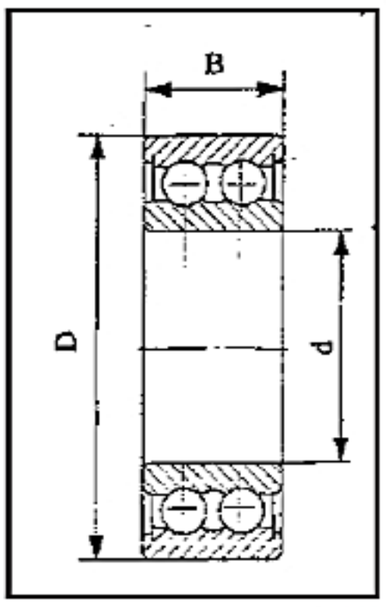

4000

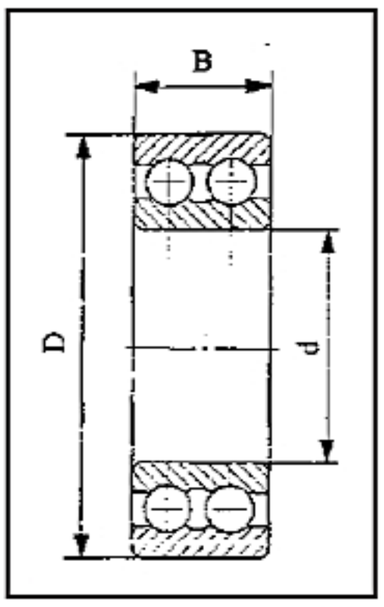

4000ZZ
4000-2RS

Double Row Ball Bearing

Bearing No.			d X D X B (mm)	Weight (kg)
4200	4200ZZ	4200-2RS	10 X 30 X 14	0.049
4201	4201ZZ	4201-2RS	12 X 32 X 14	0.053
4202	4202ZZ	4202-2RS	15 X 35 X 14	0.059
4203	4203ZZ	4203-2RS	17 X 40 X 16	0.090
4204	4204ZZ	4204-2RS	20 X 47 X 18	0.143
4205	4205ZZ	4205-2RS	25 X 52 X 18	0.161
4206	4206ZZ	4206-2RS	30 X 62 X 20	0.267
4207	4207ZZ	4207-2RS	35 X 72 X 23	0.403
4208	4208ZZ	4208-2RS	40 X 80 X 23	0.506
4209	4209ZZ	4209-2RS	45 X 85 X 23	0.555
4210	4210ZZ	4210-2RS	50 X 90 X 23	0.601
4211	4211ZZ	4211-2RS	55 X 100 X 25	0.807

Self-Aligning Ball Bearing

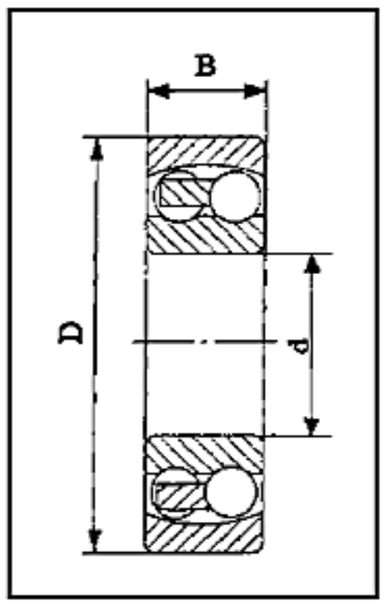

10000

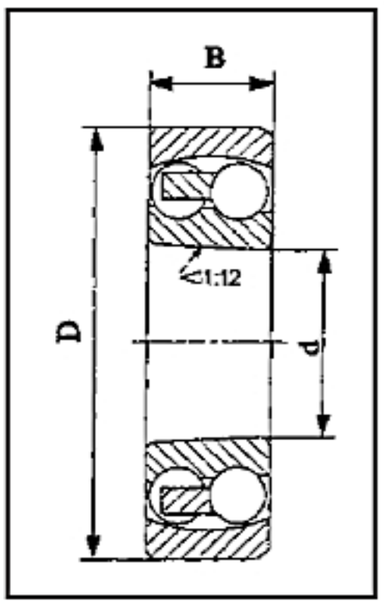

10000K

Self-Aligning Ball Bearing							
Bearing No.		d X D X B (mm)	Weight (kg)	Bearing No.		d X D X B (mm)	Weight (kg)
1200		10 X 30 X 9	0.034	1300		10 X 35 X 11	0.059
1201		12 X 32 X 10	0.040	1301		12 X 37 X 12	0.067
1202		15 X 35 X 11	0.049	1302		15 X 42 X 13	0.094
1203	1203K	17 X 40 X 12	0.073	1303	1303K	17 X 47 X 14	0.13
1204	1204K	20 X 47 X 14	0.12	1304	1304K	20 X 52 X 15	0.16
1205	1205K	25 X 52 X 15	0.14	1305	1305K	25 X 52 X 17	0.26
1206	1206K	30 X 62 X 16	0.22	1306	1306K	30 X 72 X 19	0.39
1207	1207K	35 X 72 X 17	0.32	1307	1307K	35 X 80 X 21	0.51
1208	1208K	40 X 80 X 18	0.42	1308	1308K	40 X 90 X 23	0.71
1209	1209K	45 X 85 X 19	0.47	1309	1309K	45 X 100 X 25	0.96
1210	1210K	50 X 90 X 20	0.53	1310	1310K	50 X 110 X 27	1.20
1211	1211K	55 X 100 X 21	0.71	1311	1311K	55 X 120 X 29	1.60
1212	1212K	60 X 110 X 22	0.90	1312	1312K	60 X 130 X 31	1.95
1213	1213K	65 X 120 X 23	1.15	1313	1313K	65 X 140 X 33	2.45
1214	1214K	70 X 125 X 24	1.25	1314	1314K	70 X 150 X 35	3.00
1215	1215K	75 X 130 X 25	1.35	1315	1315K	75 X 160 X 37	3.55
1216	1216K	80 X 140 X 26	1.65	1316	1316K	80 X 170 X 39	4.20
1217	1217K	85 X 150 X 28	2.05	1317	1317K	85 X 180 X 40	5.00
1218	1218K	90 X 160 X 30	2.50	1318	1318K	90 X 190 X 43	5.80
1219	1219K	95 X 170 X 32	3.10	1319	1319K	95 X 200 X 45	6.70
1220	1220K	100 X 180 X 34	3.70				
1221	1221K	105 X 190 X 36	4.35				
1222	1222K	110 X 200 X 38	5.15				

Self-Aligning Ball Bearing

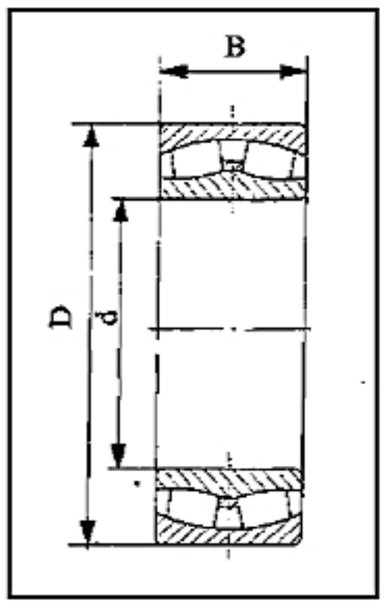

20000

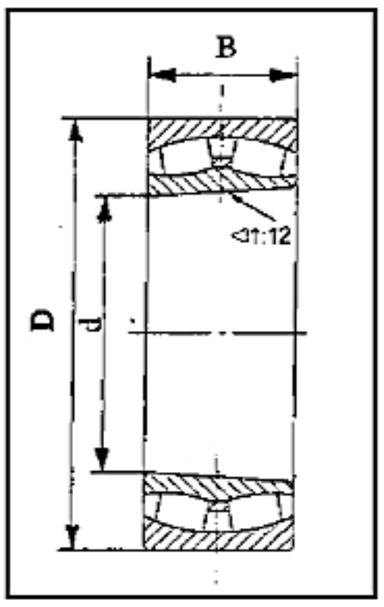

20000K

Self-Aligning Ball Bearing							
Bearing No.		d X D X B (mm)	Weight (kg)	Bearing No.		d X D X B (mm)	Weight (kg)
2202		15 X 35 X 14	0.060	2304	2304K	20 X 52 X 21	0.21
2203		17 X 40 X 16	0.088	2305	2305K	25 X 62 X 24	0.34
2204	2204K	20 X 47 X 18	0.14	2306	2306K	30 X 72 X 27	0.50
2205	2205K	25 X 52 X 18	0.16	2307	2307K	35 X 80 X 31	0.68
2206	2206K	30 X 62 X 20	0.26	2308	2308K	40 X 90 X 33	0.93
2207	2207K	35 X 72 X 23	0.40	2309	2309K	45 X 100 X 36	1.25
2208	2208K	40 X 80 X 23	0.51	2310	2310K	50 X 110 X 40	1.65
2209	2209K	45 X 85 X 23	0.55	2311	2311K	55 X 120 X 43	2.10
2210	2210K	50 X 90 X 23	0.60	2312	2312K	60 X 130 X 46	2.60
2211	2211K	55 X 100 X 25	0.81	2313	2313K	65 X 140 X 48	3.25
2212	2212K	60 X 110 X 28	1.10	2314	2314K	70 X 150 X 51	3.90
2213	2213K	65 X 120 X 31	1.45	2315	2315K	75 X 160 X 55	4.70
2214	2214K	70 X 125 X 31	1.50	2316	2316K	80 X 170 X 58	6.10
2215	2215K	75 X 130 X 31	1.60	2317	2317K	85 X 180 X 60	7.05
2216	2216K	80 X 140 X 33	2.00	2318	2318K	90 X 190 X 64	8.45
2217	2217K	85 X 150 X 36	2.50	2319	2319K	95 X 200 X 67	9.80
2218	2218K	90 X 160 X 40	3.40	2320	2320K	100 X 215 X 73	12.5
2219	2219K	95 X 170 X 43	4.10	2322	2322K	110 X 240 X 80	17.5
2220	2220K	100 X 180 X 46	5.00				
2222	2222K	110 X 200 X 53	7.10				

Spherical Roller Bearing

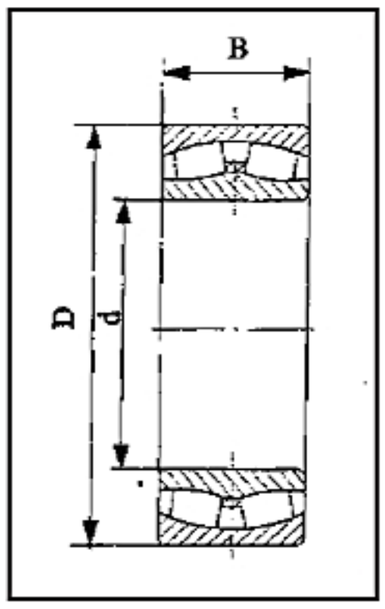

20000

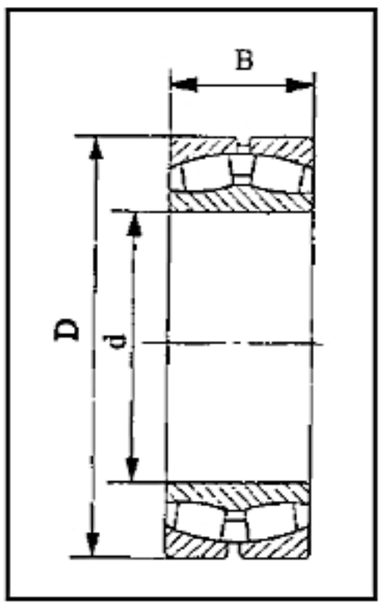

20000W33

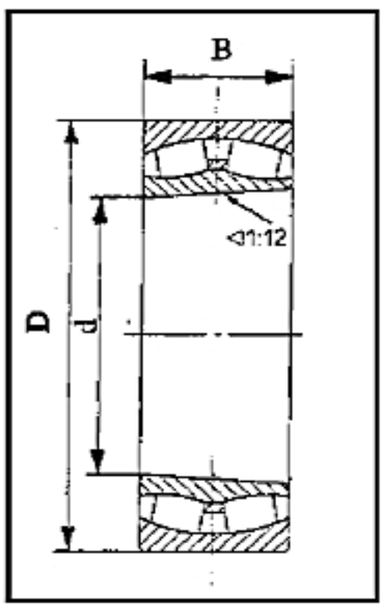

20000K

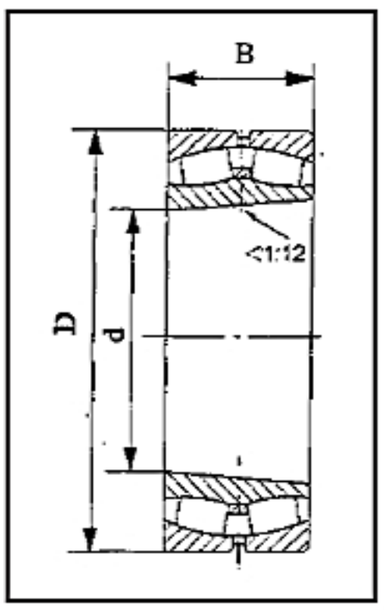

20000KW33

Self-Aligning Ball Bearing							
Bearing No.		d X D X B (mm)	Weight (kg)	Bearing No.		d X D X B (mm)	Weight (kg)
22206	22206K	30 X 62 X 20	0.28	22308	22308K	40 X 90 X 33	1.00
22207	22207K	35 X 72 X 23	0.43	22309	22309K	45 X 100 X 36	1.35
22208	22208K	40 X 80 X 23	0.52	22310	22310K	50 X 110 X 40	1.85
22209	22209K	45 X 85 X 23	0.56	22311	22311K	55 X 120 X 43	2.35
22210	22210K	50 X 90 X 23	0.60	22312	22312K	60 X 130 X 46	2.95
22211	22211K	55 X 100 X 25	0.82	22313	22313K	65 X 140 X 48	3.55
22212	22212K	60 X 110 X 28	1.10	22314	22314K	70 X 150 X 51	4.30
22213	22213K	65 X 120 X 31	1.45	22315	22315K	75 X 160 X 55	5.25
22214	22214K	70 X 125 X 31	1.55	22316	22316K	80 X 170 X 58	6.20
22215	22215K	75 X 130 X 31	1.65	22317	22317K	85 X 180 X 60	7.25
22216	22216K	80 X 140 X 33	2.05	22318	22318K	90 X 190 X 64	8.60
22217	22217K	85 X 150 X 36	2.55	22319	22319K	95 X 200 X 67	10.00
22218	22218K	90 X 160 X 40	3.04				
22219	22219K	95 X 170 X 43	4.00				
22220	22220K	100 X 180 X 46	4.80				
2222	22222K	110 X 200 X 53	7.00				
22224	22224K	120 X 180 X 46	8.45				
22226	22226K	130 X 230 X 64	10.5				
22228	22228K	140 X 250 X 68	14.5				

Tapered Roller Bearing

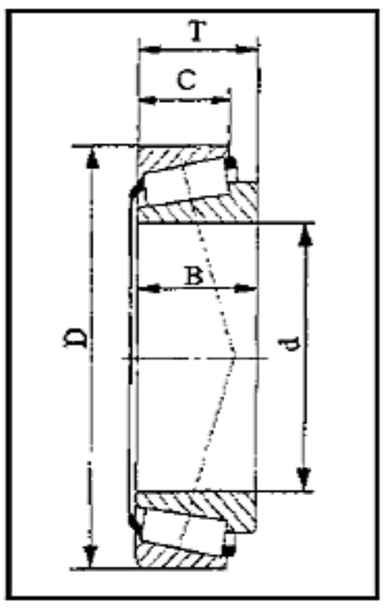

30000

Tapered Roller Bearing					
Bearing No.	d X D X B (mm)	Weight (kg)	Bearing No.	d X D X B (mm)	Weight (kg)
30202	15 X 35 X 11.75	0.06	30302	15 X 42 X 14.25	0.10
30203	17 X 40 X 13.25	0.08	30303	17 X 47 X 15.25	0.13
30204	20 X 47 X 15.25	0.12	30304	20 X 52 X 16.25	0.17
30205	25 X 52 X 16.25	0.15	30305	25 X 62 X 18.25	0.26
30206	30 X 62 X 17.25	0.23	30306	30 X 72 X 20.25	0.39
30207	35 X 72 X 18.25	0.32	30307	35 X 80 X 22.75	0.52
30208	40 X 80 X 19.75	0.42	30308	40 X 90 X 25.25	0.72
30209	45 X 85 X 20.75	0.48	30309	45 X 100 X 27.25	0.97
30210	50 X 90 X 21.75	0.54	30310	50 X 110 X 29.25	1.25
30211	55 X 100 X 22.75	0.70	30311	55 X 120 X 31.5	1.55
30212	60 X 110 X 23.75	0.88	30312	60 X 130 X 33.5	1.95
30213	65 X 120 X 24.75	1.15	30313	65 X 140 X 36	2.40
30214	70 X 125 X 26.25	1.25	30314	70 X 150 X 38	2.90
30215	75 X 130 X 27.25	1.40	30315	75 X 160 X 40	3.45
30216	80 X 140 X 28.25	1.60	30316	80 X 170 X 42.5	4.10
30217	85 X 150 X 30.5	2.05	30317	85 X 180 X 44.5	4.85
30218	90 X 160 X 32.5	2.55	30318	90 X 190 X 46.5	5.65
30219	95 X 170 X 34.5	3.00	30319	95 X 200 X 49.5	6.70
30220	100 X 180 X 37	3.65	30320	100 X 215 X 51.5	8.05
30221	105 X 190 X 39	4.25	30321	105 X 225 X 53.5	9.15
30222	110 X 200 X 41	5.10			
30224	120 X 215 X 43.5	6.15			
30226	130 X 230 X 43.75	7.60			
30228	140 X 250 X 45.75	8.65			

Tapered Roller Bearing

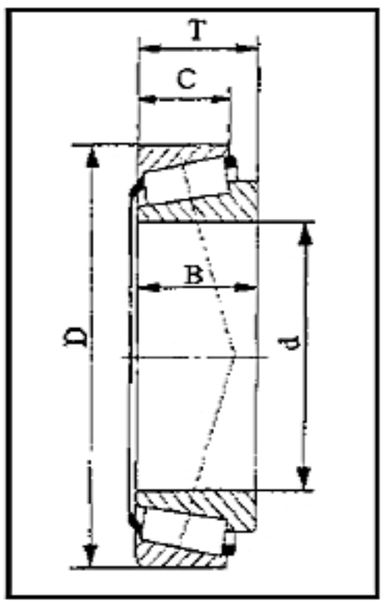

30000

Tapered Roller Bearing					
Bearing No.	d X D X B (mm)	Weight (kg)	Bearing No.	d X D X B (mm)	Weight (kg)
32205	25 X 52 X 19.25	0.19	32314	70 X 150 X 54	4.300
32206	30 X 62 X 21.25	0.28	32315	75 X 160 X 58	5.200
32207	35 X 72 X 24.25	0.43	32316	80 X 170 X 61.5	6.200
32208	40 X 80 X 24.75	0.53	32317	85 X 180 X 63.5	6.850
32209	45 X 85 X 24.75	0.58	32318	90 X 190 X 67.5	5.900
32210	50 X 90 X 24.75	0.61	32319	95 X 200 X 71.5	11.000
32211	55 X 100 X 26.75	0.83	32320	100 X 215 X 77.5	12.500
32212	60 X 110 X 29.75	1.15	32321	105 X 225 X 81.5	14.500
32213	65 X 120 X 32.75	1.50	32322	110 X 240 X 84.5	17.000
32214	70 X 125 X 33.25	1.60			
32215	75 X 130 X 33.25	1.70			
32216	80 X 140 X 35.25	2.05	32006X	30 X 55 X 17	0.17
32217	85 X 150 X 38.5	2.60	32007X	35 X 62 X 18	0.22
32218	95 X 160 X 42.5	3.35	32008X	40 X 68 X 19	0.27
32219	95 X 170 X 45.5	4.05	32009X	45 X 75 X 20	0.34
32220	100 X 180 X 49	4.90	32010X	50 X 80 X 20	0.37
32221	105 X 190 X 53	6.00	32011X	55 X 90 X 23	0.55
32222	110 X 200 X 56	7.10	32012X	60 X 95 X 23	0.59
32224	120 X 215 X 61.5	9.15	32013X	65 X 100 X 23	0.63
32226	130 X 230 X 67.75	11.50	32014X	70 X 110 X 25	0.84
32228	140 X 250 X 71.75	14.50	32015X	75 X 115 X 25	0.9
32230	150 X 270 X 77	17.50	32016X	80 X 125 X 29	1.3
			32017X	85 X 130 X 29	1.35
			32018X	90 X 140 X 32	1.75
32303	17 X 47 X 20.25	0.170	32019X	95 X 145 X 32	1.8
32304	20 X 52 X 22.25	0.230	32020X	100 X 150 X 32	1.9
32305	25 X 62 X 25.25	0.360	32021X	105 X 160 X 35	2.4
32306	30 X 72 X 28.75	0.550	32022X	110 X 170 X 38	3.05
32307	35 X 80 X 32.75	0.730	32024X	120 X 180 X 38	3.24
32308	40 X 90 X 35.25	1.000	32026X	130 X 200 X 45	4.95
32309	45 X 100 X 38.25	1.350	32028X	140 X 210 X 45	5.25
32310	50 X 110 X 42.25	1.800	32030X	150 X 225 X 48	6.35
32311	55 X 120 X 45.5	2.300	32032X	160 X 240 X 51	7.75
32312	60 X 130 X 48.5	2.850			
32313	65 X 140 X 51	3.450			

Thrust Ball Bearing

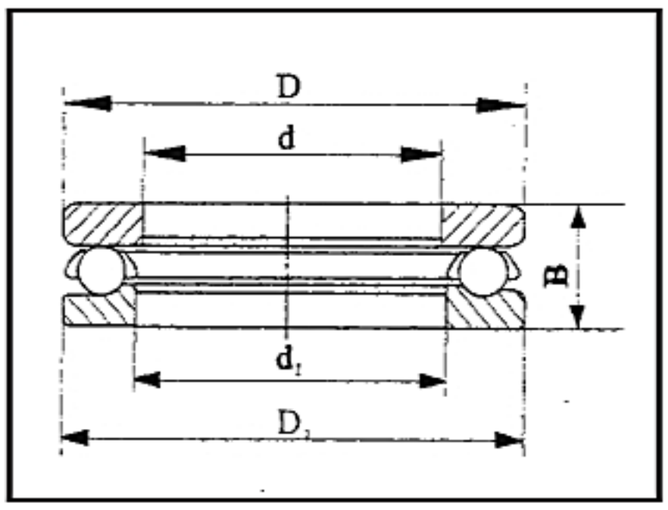

51000

Thrust Ball Bearing					
Bearing No.	d X D X B (mm)	Weight (kg)	Bearing No.	d X D X B (mm)	Weight (kg)
51100	10 X 24 X 9	0.02	51200	10 X 26 X 11	0.03
51101	12 X 26 X 9	0.02	51201	12 X 28 X 11	0.03
51102	15 X 28 X 9	0.02	51202	15 X 32 X 12	0.05
51103	17 X 30 X 9	0.03	51203	17 X 35 X 12	0.05
51104	20 X 35 X 10	0.04	51204	20 X 40 X 14	0.08
51105	25 X 42 X 11	0.06	51205	25 X 47 X 15	0.11
51106	30 X 47 X 11	0.06	51206	30 X 52 X 16	0.13
51107	35 X 52 X 12	0.08	51207	35 X 62 X 18	0.22
51108	40 X 60 X 13	0.12	51208	40 X 68 X 19	0.28
51109	45 X 65 X 14	0.14	51209	45 X 73 X 20	0.30
51110	50 X 70 X 14	0.16	51210	50 X 78 X 22	0.37
51111	55 X 78 X 16	0.23	51211	55 X 90 X 25	0.59
51112	60 X 85 X 17	0.20	51212	60 X 95 X 26	0.65
51113	65 X 90 X 18	0.33	51213	65 X 100 X 27	0.78
51114	70 X 95 X 18	0.35	51214	70 X 105 X 27	0.79
51115	75 X 100 X 19	0.40	51215	75 X 110 X 27	0.83
51116	80 X 105 X 19	0.42	51216	80 X 115 X 28	0.91
51117	85 X 110 X 19	0.44	51217	85 X 125 X 31	1.20
51118	90 X 120 X 22	0.67	51218	90 X 135 X 35	1.70
51120	100 X 135 X 25	0.97	51220	100 X 150 X 38	2.20
51122	110 X 145 X 25	1.05	51222	110 X 160 X 38	2.40
51124	120 X 155 X 30	1.15	51224	120 X 170 X 39	2.65
51126	130 X 170 X 31	1.85	51226	130 X 190 X 45	4.00
51128	140 X 180 X 31	2.05	51228	140 X 200 X 46	4.35
51130	150 X 190 X 31	2.20	51230	150 X 215 X 50	6.10
51132	160 X 200 X 31	2.35	51232	160 X 225 X 51	6.55
51134	170 X 215 X 34	3.30			

Thrust Ball Bearing

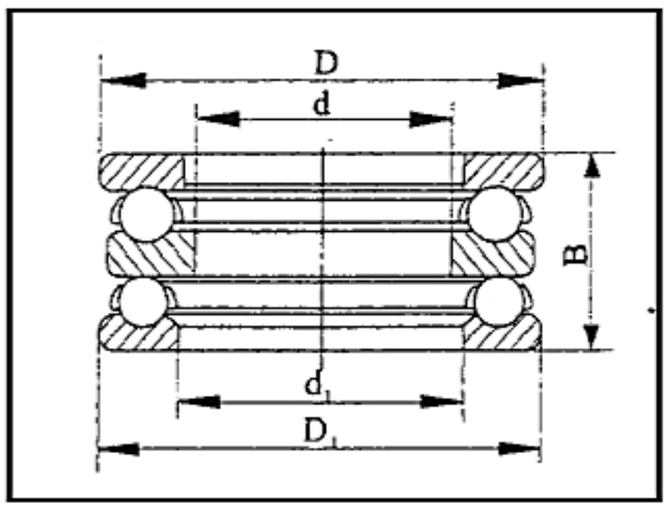

52000

Thrust Ball Bearing					
Bearing No.	d X D X B (mm)	Weight (kg)	Bearing No.	d X D X B (mm)	Weight (kg)
51305	25 X 52 X 18	0.17	51418	90 X 190 X 77	11.00
51306	30 X 60 X 21	0.26	51420	100 X 210 X 85	15.00
51307	35 X 68 X 24	0.38			
51308	40 X 78 X 26	0.53			
51309	45 X 85 X 28	0.66	52202	10 X 32 X 22	0.08
51310	50 X 95 X 31	0.94	52204	15 X 40 X 26	0.15
51311	55 X 105 X 35	1.30	52205	20 X 47 X 28	0.22
51312	60 X 110 X 35	1.35	52206	25 X 52 X 29	0.25
51313	65 X 115 X 36	1.50	52207	30 X 62 X 34	0.41
51314	70 X 125 X 40	2.00	52208	30 X 68 X 36	0.55
51315	75 X 135 X 44	2.60	52209	35 X 73 X 37	0.60
51316	80 X 140 X 44	2.70	52210	40 X 78 X 39	0.71
51317	85 X 150 X 49	3.55	52211	45 X 90 X 45	1.10
51318	90 X 155 X 50	3.80	52212	50 X 95 X 46	1.20
51320	100 X 170 X 55	4.95	52213	55 X 100 X 47	1.35
51322	110 X 190 X 63	7.85	52214	60 X 110 X 47	1.55
51324	120 X 210 X 70	11.00	52215	65 X 115 X 48	1.70
51326	130 X 225 X 75	13.00			
51328	140 X 240 X 80	15.50			
51330		16.50			
51405	25 X 60 X 24	0.34			
51406	30 X 70 X 28	0.52			
51407	35 X 80 X 32	0.76			
51408	40 X 90 X 36	1.10			
51409	45 X 100 X 39	1.40			
51410	50 X 110 X 43	2.00			
51411	55 X 120 X 48	2.55			
51412	60 X 130 X 51	3.10			
51413	65 X 140 X 56	4.00			
51414	70 X 150 X 60	5.00			
51415	75 X 160 X 65	6.75			
51416	80 X 170 X 68	7.95			
51417	85 X 180 X 72	9.45			

Single Row Angular Contact Ball Bearing

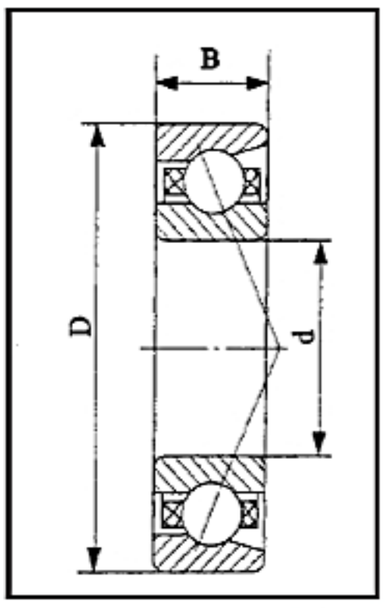

70000

Single Row Angular Contact Ball Bearing									
Bearing No.			d X D X B (mm)	Weight (kg)	Bearing No.			d X D X B (mm)	Weight (kg)
7004C	7004AC	7004B	20 X 42 X 12	0.080	7216C	7216AC	7216B	80 X 140 X 26	1.45
7005C	7005AC	7005B	25 X 47 X 12	0.093	7217C	7217AC	7217B	85 X 150 X 28	1.85
7006C	7006AC	7006B	30 X 55 X 13	0.135	7218C	7218AC	7218B	90 X 160 X 30	2.30
7007C	7007AC	7007B	35 X 62 X 14	0.180	7219C	7219AC	7219B	95 X 170 X 32	2.70
7008C	7008AC	7008B	40 X 68 X 15	0.222	7220C	7220AC	7220B	100 X 180 X 34	3.30
7009C	7009AC	7009B	45 X 75 X 16	0.282	7222C	7222AC	7222B	110 X 200 X 38	4.60
7010C	7010AC	7010B	50 X 80 X 16	0.306					
7011C	7011AC	7011B	55 X 90 X 18	0.447					
7012C	7012AC	7012B	60 X 95 X 18	0.478	7303C	7303AC	7303B	17 X 47 X 14	0.11
7013C	7013AC	7013B	65 X 100 X 18	0.509	7304C	7304AC	7304B	20 X 52 X 15	0.14
7014C	7014AC	7014B	70 X 110 X 20	0.705	7305C	7305AC	7305B	25 X 62 X 17	0.23
7015C	7015AC	7015B	75 X 115 X 20	0.745	7306C	7306AC	7306B	30 X 72 X 19	0.34
7016C	7016AC	7016B	80 X 125 X 22	0.994	7307C	7307AC	7307B	35 X 80 X 21	0.45
7017C	7017AC	7017B	85 X 130 X 22	1.04	7308C	7308AC	7308B	40 X 90 X 23	0.63
7018C	7018AC	7018B	90 X 140 X 24	1.35	7309C	7309AC	7309B	45 X 100 X 25	0.85
7019C	7019AC	7019B	95 X 145 X 24	1.41	7310C	7310AC	7310B	50 X 100 X 27	1.10
7020C	7020AC	7020B	100 X 150 X 24	1.47	7311C	7311AC		55 X 120 X 29	1.40
					7312C	7312AC		60 X 130 X 31	1.75
					7313C	7313AC		65 X 140 X 33	2.15
7200C	7200AC	7200B	10 X 30 X 9	0.030	7314C	7314AC		70 X 150 X 35	2.65
7201C	7201AC	7201B	12 X 32 X 10	0.036	7315C	7315AC		75 X 160 X 37	3.20
7202C	7202AC	7202B	15 X 35 X 10	0.045	7316C	7316AC		80 X 170 X 39	3.80
7203C	7203AC	7203B	17 X 40 X 12	0.065	7317C	7317AC		85 X 180 X 41	4.45
7204C	7204AC	7204B	20 X 47 X 14	0.11	7318C	7318AC		90 X 190 X 43	5.20
7205C	7205AC	7205B	25 X 52 X 15	0.13	7319C	7319AC		95 X 200 X 45	6.05
7206C	7206AC	7206B	30 X 62 X 16	0.20	7320C	7320AC		100 X 215 X 47	7.50
7207C	7207AC	7207B	35 X 72 X 17	0.28	7322C	7322AC		110 X 200 X 38	10.0
7208C	7208AC	7208B	40 X 80 X 18	0.37					
7209C	7209AC	7209B	45 X 85 X 19	0.42					
7210C	7210AC	7210B	50 X 90 X 20	0.47					
7211C	7211AC	7211B	55 X 100 X 21	0.62					
7212C	7212AC	7212B	60 X 110 X 22	0.80					
7213C	7213AC	7213B	65 X 120 X 23	1.00					
7214C	7214AC	7214B	70 X 125 X 24	1.10					
7215C	7215AC	7215B	75 X 130 X 25	1.20					

Spherical Plain Bearing With Fitting Crack

GE ES - GE ES-2RS Series

- Outer ring with single split in axial direction.
- Lubrication grooves and holes in the outer and inner ring of type ES.
- Outer ring of type-2RS with two seals.
- Both outer and inner ring are properly phosphorlylate-treated.

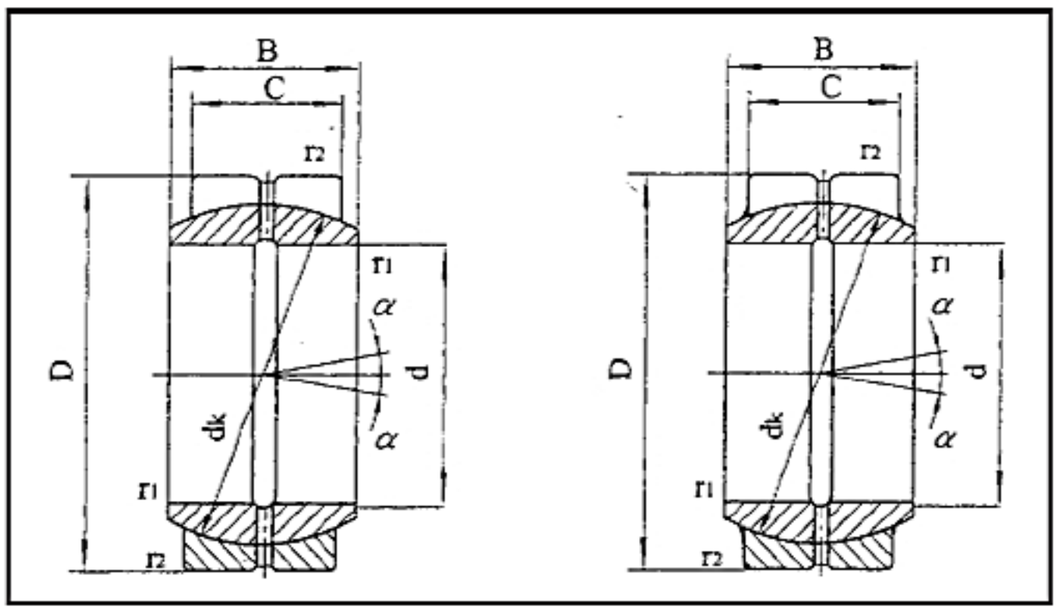

GE---ES GE ES-2RS

Bearing No.		Dimensions (mm)								Load Rating		Weight (kg)
		d	D	B	C	d_k min	r_1 min	r_2 min	α	C	C0	
GE15ES	GE15ES-2RS	15	26	12	9	22	0.3	0.3	8	17.0	85.0	0.025
GE17ES	GE17ES-2RS	17	30	14	10	25	0.3	0.3	10	21.2	106	0.041
GE20ES	GE20ES-2RS	20	35	16	12	29	0.6	0.3	9	30.0	146	0.061
GE25ES	GE25ES-2RS	25	42	20	16	35.5	0.6	0.6	7	48.0	240	0.11
GE30ES	GE30ES-2RS	30	47	22	18	40.7	0.6	0.6	6	62.0	310	0.14
GE35ES	GE35ES-2RS	35	55	25	20	47	0.6	1.0	6	80.0	400	0.22
GE40ES	GE40ES-2RS	40	62	28	22	53	0.6	1.0	7	100	500	0.30
GE45ES	GE45ES-2RS	45	68	32	25	60	0.6	1.0	7	127	640	0.40
GE50ES	GE50ES-2RS	50	75	35	28	66	0.6	1.0	6	156	780	0.54
GE60ES	GE60ES-2RS	60	90	44	36	80	1.0	1.0	6	245	1220	1.00
GE70ES	GE70ES-2RS	70	105	49	40	92	1.0	1.0	6	315	1560	1.5
GE80ES	GE80ES-2RS	80	120	55	45	105	1.0	1.0	6	400	2000	2.2
GE90ES	GE90ES-2RS	90	130	60	50	115	1.0	1.0	5	490	2450	2.7
GE100ES	GE100ES-2RS	100	150	70	55	130	1.0	1.0	7	610	3050	4.3
GE110ES	GE110ES-2RS	110	160	70	55	140	1.0	1.0	6	655	3250	4.7
GE120ES	GE120ES-2RS	120	180	85	70	160	1.0	1.0	6	950	4750	8.0
GE140ES	GE140ES-2RS	140	210	90	70	180	1.0	1.0	7	1080	5400	11.0
GE160ES	GE160ES-2RS	160	230	105	80	200	1.0	1.0	8	1360	6800	14.01
GE180ES	GE180ES-2RS	180	260	105	80	225	1.1	1.1	6	1530	7650	18.65
GE200ES	GE200ES-2RS	200	290	130	100	250	1.1	1.1	7	2120	10600	28.03
GE220ES	GE220ES-2RS	220	320	135	100	275	1.1	1.1	8	2320	11600	35.51
GE240ES	GE240ES-2RS	240	340	140	100	300	1.1	1.1	8	2550	12700	39.91
GE260ES	GE260ES-2RS	260	370	150	110	320	1.1	1.1	7	3038	15190	51.54

Inlaid Liner Rod Ends With Male Thread

POS Series

- Bearing with a stretching rod, stretching rod with right or left-hand male thread.
- The sliding surface with a bronze liner.
- To plate zine on the surface of rod body, the housing ring with a lubrication hole or a grease nipple.

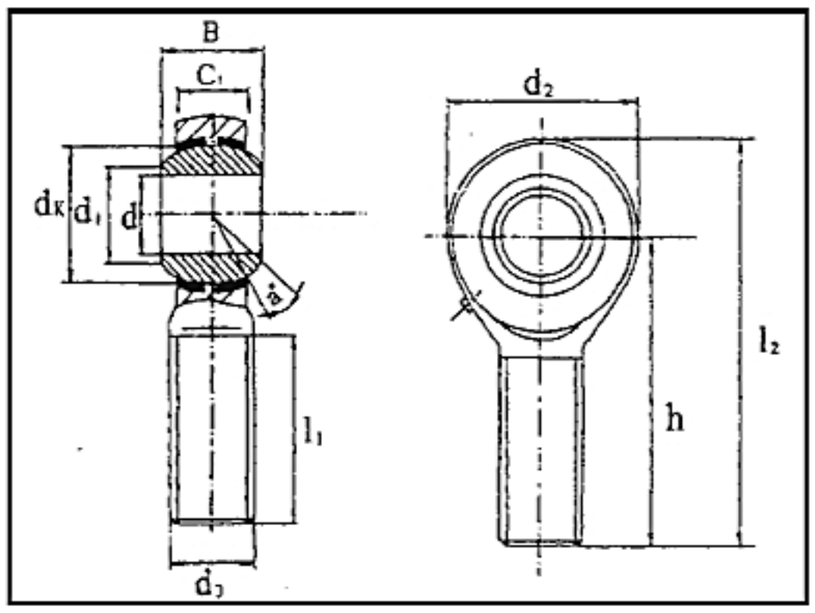

POS

Bearing No.	Dimensions (mm)												Load Rating		Weight (kg)
	d	d_3	B	C_1 max	l_1 min	d_2 max	h	l_2 min	d_K	l_1 max	α°	d_1	Dynamic	Startic	
POS 5	5	M5	8	6	20	18	33	42	11.11	0.3	13	7.7	3.25	5.7	0.013
POS 6	6	M6	9	6.75	23	20	36	46	12.7	0.3	13	8.9	4.30	7.2	0.020
POS 8	8	M8	12	9	25	24	42	54	15.875	0.3	14	10.3	7.20	11.6	0.030
POS 10	10	M10	14	10.5	30	26	48	61	19.05	0.3	13	12.9	10.0	14.5	0.055
POS 12	12	M12	16	12	34	30	54	69	22.225	0.3	13	15.4	13.4	17.0	0.085
POS 14	14	M14	19	13.5	37	34	60	77	25.4	0.3	16	16.8	17.0	24.0	0.14
POS 16	16	M16	21	15	41	40	66	86	28.575	0.3	15	19.3	21.6	28.5	0.21
POS 18	18	M18X1.5	23	16.5	45	44	72	94	31.75	0.3	15	21.8	26.0	42.5	0.28
POS 20	20	M20X1.5	25	18	48	48	78	102	34.925	0.3	14	24.3	31.5	52.5	0.38
POS 22	22	M22X1.5	28	20	52	54	84	111	38.10	0.3	15	25.8	38.0	57.0	0.48
POS 25	25	M24X2	31	22	58	60	94	124	42.85	0.3	15	29.5	47.5	68.0	0.64
POS 28	28	M27X2	35	24	63	66	103	136	47.6	0.3	15	33.7	58.0	75.5	0.96
POS 30	30	M30X2	37	25	67	70	110	145	50.8	0.3	17	34.8	64.0	88.0	1.1

* For left-hand thread, suffix "L" is added to bearing number and thread sign, e.g.POSL8 M8L-6g

Inlaid Liner Rod Ends With Female Thread

PHS Series

- Bearing with a stretching rod, stretching rod with right or left-hand female thread.
- It is made up of a maintenance-free spherical plain radial bearing and rod body.
- To plate zine on the surface of rod body, spherical surface of inner ring with chromium plating.

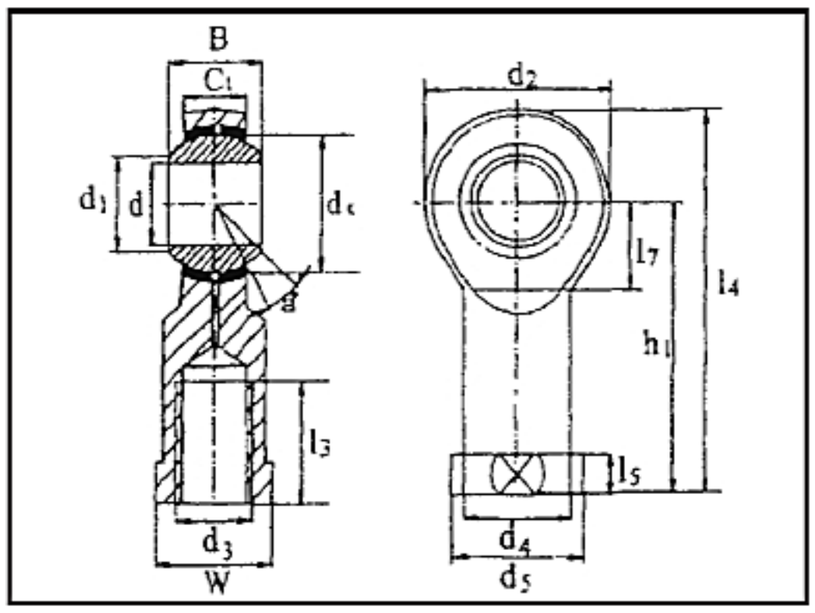

PHS

Bearing No.	Dimensions (mm)															Load Rating		Weight (kg)
	d	d3	B	C1 max	w	l3 min	d2 max	l4 max	h1	l3 max	d4 max	d5 max	dk	d1	α °	Dynamic	Startic	
PHS 5	5	M5	8	6	9	14	18	36	27	4	8.5	11	11.11	7.7	13	3.25	5.70	0.016
PHS 6	6	M6	9	6.75	11	14	20	40	30	5	10	13	12.7	9	13	4.30	7.20	0.022
PHS 8	8	M8	12	9	14	17	24	48	36	5	12.5	16	15.875	10.4	4	7.20	11.60	0.047
PHS 10	10	M10	14	10.5	17	21	26	56	43	6.5	15	19	19.05	12.9	13	10.0	14.5	0.077
PHS 12	12	M12	16	12	19	24	30	65	50	6.5	17.5	22	22.225	15.4	13	13.4	17.0	0.10
PHS 14	14	M14	19	13.5	22	27	34	74	57	8	20	26	25.4	16.9	16	17.0	24.0	0.16
PHS 16	16	M16	21	15	24	33	40	84	64	8	22	28	28.575	19.4	15	21.6	28.5	0.22
PHS 18	18	M18X1.5	23	16.5	27	36	44	93	71	10	25	31	31.75	21.9	15	26.0	42.5	0.32
PHS 20	20	M20X1.5	25	18	30	40	48	101	77	10	27.5	35	34.925	24.4	14	31.5	42.5	0.42
PHS 22	22	M22X1.5	28	20	32	43	54	111	84	12	30	38	38.10	25.8	5	38.0	57.0	0.54
PHS 25	25	M24X2	31	22	36	48	60	124	94	12	33.5	42	42.85	29.6	5	47.5	68.0	0.73
PHS 28	28	M27X2	35	24	41	53	66	136	103	14	37	46	47.6	32.3	15	58.0	75.0	0.98
PHS 30	30	M30X2	37	25	46	56	70	145	110	15	40	50	50.8	34.8	17	64.0	88.0	1.1

* For left-hand thread, suffix "L" is added to bearing number and thread sign, e.g.GIL10 UK M10L-6H

CONTENTS

Miniature Ball Bearing ..... 2 ~ 3

Deep Groove Ball Bearing ..... 4 ~ 8

Double Row Angular Contact Ball Bearing 9

Self-Aligning Ball Bearing ..... 10 ~ 11

Spherical Roller Bearing 12

Tapered Roller Bearing ..... 13 ~ 14

Thrust Ball Bearing ..... 15 ~ 16

Single Row Angular Contact Ball Bearing 17

Spherical Plain Bearing With Fitting Crack 18

Inlaid Liner Rod Ends With Male Thread 19

Inlaid Liner Rod Ends With Female Thread 20

Pillow Block Units ..... 21 ~ 22

Square Flange Units ..... 23 ~ 24

Two-Bolt Flange Units ..... 25 ~ 26

Take-Up Units ..... 27 ~ 28

Flange Cartridge Units 29

Pedestal Pillow Blocks 30

Tapped Base Pillow Block 31

Nanger Bearing Units 32

Flange Bracket Units ..... 33 ~ 34

Cylindrical Cartridce Units 35

UKP + H (Adapter) 36

Regarding the various markets, the technical data and production structure of NET bearing can be readjusted without any prior notice. We hope we could serve our users better and sincerely welcome customers' comments and suggestion for any improvement.

Pillow Block Units

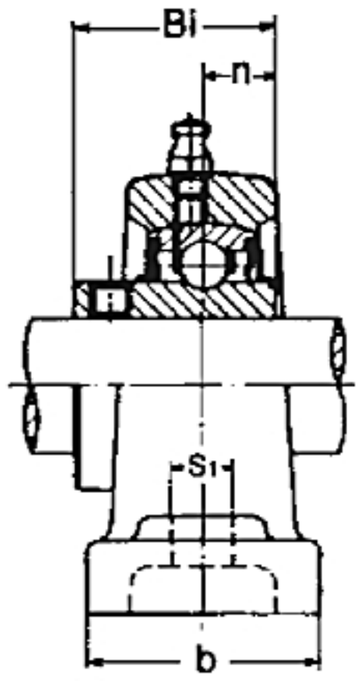

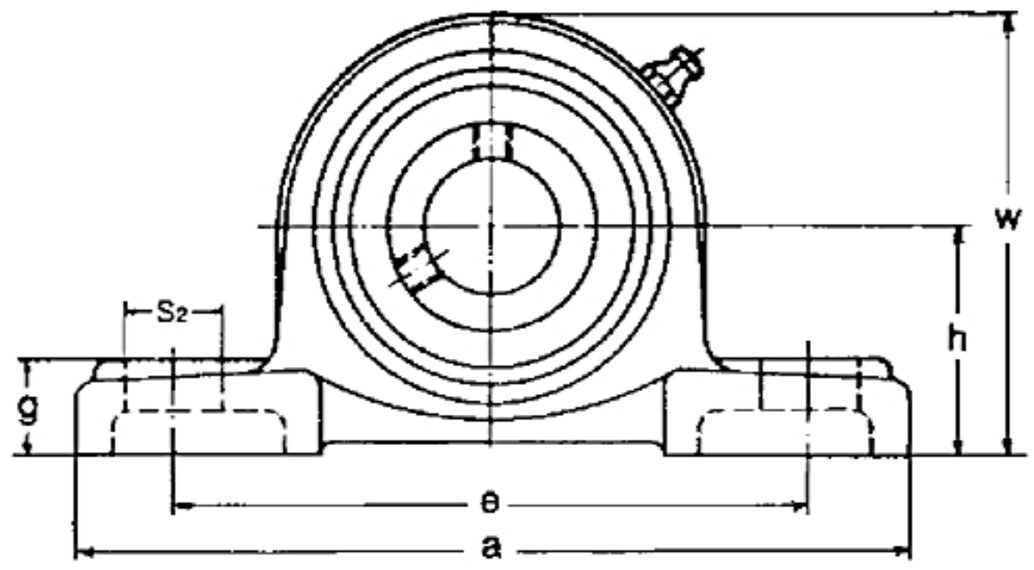

Unit No.	Shaft Dia. (mm)	Dimensions (mm)										Bolt Used	Bearing No.	Housing No.	Weight (kg)
		h	a	e	b	s_1	s_2	g	w	Bi	n				
UCP 201 201-8	12 12.7 (1/2)	30.2	127	95	38	13	19	14	60	31	12.7	M10 (W 3/8)	UP 201 201-8	P 203	0.66
UCP 202 202-10	15 15.875 (5/8)	30.2	127	95	38	13	19	14	60	31	12.7	M10 (W 3/8)	UP 202 202-10	P 203	0.65
UCP 203 203-11	17 17.463 (11/16)	30.2	127	95	38	13	19	14	60	31	12.7	M10 (W 3/8)	UP 203 203-11	P 203	0.64
UCP 204 204-12	20 19.05 (3/4)	33.3	127	95	38	13	19	14	63	31	12.7	M10 (W 3/8)	UP 204 204-12	P 204	0.7
UCP 205 205-14 205-15 205-16	25 22.225 (7/8) 23.812 (15/16) 25.4 (1)	36.5	140	105	38	13	19	16	70	34	14.3	M10 (W 3/8)	UP 205 205-14 205-15 205-16	P 205	0.85
UCP 206 206-18 206-19 206-20	30 28.575 (1 1/8) 30.162 (1 3/16) 31.75	42.9	165	121	48	17	21	17	83	38.1	15.9	M14 (W 1/2)	UP 206 206-18 206-19 206-20	P 206	1.35
UCP 207 207-20 207-21 207-22 207-23	35 31.75 (1 1/4) 33.338 (1 5/16) 34.925 (1 3/8) 36.512 (1 7/16)	47.6	167	127	48	17	21	19	92	42.9	17.5	M14 (W 1/2)	UP 207 207-20 207-21 207-22 207-23	P 207	1.65
UCP 208 208-24 208-25	40 38.1 (1 1/2) 39.688 (1 9/16)	49.2	184	137	54	17	21	19	98	49.2	19	M14 (W 1/2)	UP 208 208-24 208-25	P 208	2.10
UCP 209 209-26 209-27 209-28	45 41.275 (1 5/8) 42.862 (1 11/16) 44.45 (1 3/4)	54	190	146	54	17	21	20	106	49.2	19	M14 (W 1/2)	UP 209 209-26 209-27 209-28	P 209	2.35 14.7

Pillow Block Units

Unit No.	Shaft Dia. (mm)	Dimensions (mm)										Bolt Used	Bearing No.	Housing No.	Weight (kg)
		h	a	e	b	s_1	s_2	g	w	Bi	n				
UCP 210 210-30 210-31 210-32	50 47.625 (1 7/8) 49.212 (1 15/16) 50.8 (2)	57.2	206	159	60	20	22	22	112	51.6	19	M16 (W 5/8)	UP 210 210-30 210-31 210-32	P 210	2.96
UCP 211 211-32 211-34 211-35	55 50.8 (2) 53.975 (2 1/8) 55.562 (2 3/16)	63.5	219	171	60	20	22	22	125	55.6	22.2	M16 (W 5/8)	UP 211 211-32 211-34 211-35	P 211	3.70
UCP 212 212-36 212-38 212-39	60 57.15 (2 1/4) 60.325 (2 3/8) 61.912 (2 7/16)	69.8	241	184	70	20	25	25	137	65.1	25.4	M16 (W 5/8)	UP 212 212-36 212-38 212-39	P 212	5.00
UCP 213 213-40	65 63.5 (2 1/2)	76.2	265	203	70	25	30	27	150	65.1	25.4	M20 (W 3/4)	UP 213 213-40	P 213	5.19
UCP 214 214-44	70 69.8 (2 3/4)	79.4	266	210	72	25	31	27	156	74.6	30.2	M20 (W 3/4)	UP 214 214-44	P 214	6.5
UCP 215 215-47 215-48	75 74.613 (2 15/16) 76.2 (3)	82.6	275	217	74	25	31	28	163	77.8	33.3	M20 (W 3/4)	UP 215 215-47 215-48	P 215	7.35
UCP 216 216-50	80 79.375 (3 1/8)	88.9	292	232	78	25	31	30	175	82.6	33.3	M20 (W 3/4)	UP 216 216-50	P 216	10
UCP 217 217-52	85 82.55 (3 1/4)	95.2	310	247	83	25	31	32	187	85.7	34.1	M20 (W 3/4)	UP 217 217-52	P 217	12.2
UCP 218 218-56	90 88.9 (3 1/2)	101.6	327	262	88	27	33	34	200	96	39.7	M22 (W 7/8)	UP 218 218-56	P 218	14.7

Square Flange Units

UCF 200
Series

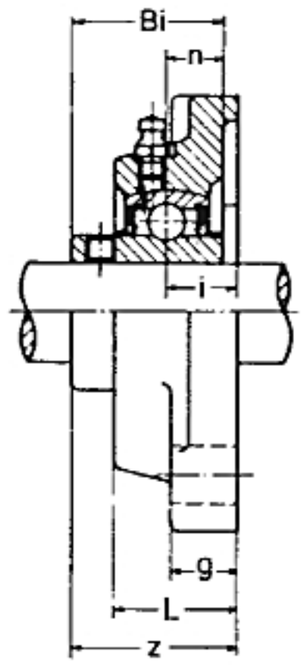

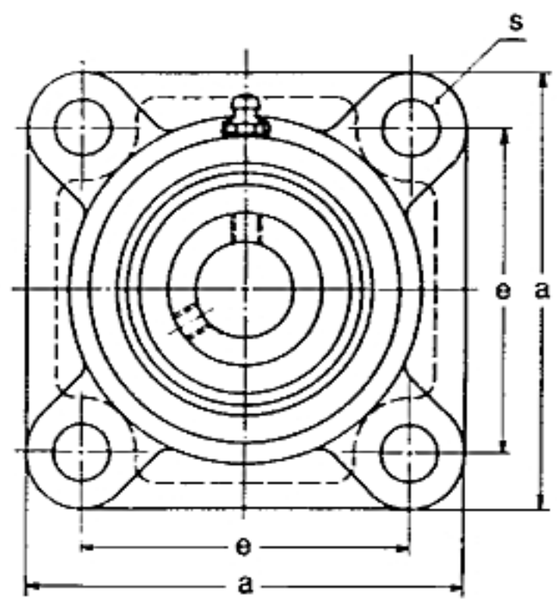

Unit No.	Shaft Dia. (mm)	Dimensions (mm)									Bolt Used	Bearing No.	Housing No.	Weight (kg)
		a	e	l	g	L	s	z	Bi	n				
UCF 201 201-8	12 12.7 (1/2)	86	64	15	12	25.5	12	33.3	31	12.7	M10 (W 3/8)	UC 201 201-8	F 204	0.65
UCF 202 202-10	15 15.875 (5/8)	86	64	15	12	25.5	12	33.3	31	12.7	M10 (W 3/8)	UC 202 202-10	F 204	0.64
UCF 203	17	86	64	15	12	25.5	12	33.3	31	12.7	M10 (W 3/8)	UC 203	F 204	0.63
UCF 204 204-12	20 19.05 (3/4)	86	64	15	12	25.5	12	33.3	31	12.7	M10 (W 3/8)	UC 204 204-12	F 204	0.61
UCF 205 205-14 205-15 205=16	25 22.225 (7/8) 23.812 (15/16) 25.4 (1)	95	70	16	14	27	12	35.7	34	14.3	M10 (W 3/8)	UC 205 205-14 205-15 205=16	F 205	0.9
UCF 206 206-18 206-19	30 28.575 (1 1/8) 30.162 (1 3/16)	108	83	18	14	31	12	40.2	38.1	15.9	M10 (W 3/8)	UC 206 206-18 206-19	F 206	1.20
UCF 207 207-20 207-21 207-22 207-23	35 31.75 (1 1/4) 33.338 (1 5/16) 34.925 (1 3/8) 36.512 (1 7/16)	117	92	19	16	34	14	44.4	42.9	17.5	M12 (W 1/2)	UC 207 207-20 207-21 207-22 207-23	F 207	1.55
UCF 208 208-24 208-25	40 38.1 (1 1/2) 39.668 (1 9/16)	130	102	21	16	36	16	51.2	49.2	19	M14 (W 1/2)	UC 208 208-24 208-25	F 208	2.0
UCF 209 209-26 209-27 209-28	45 41.275 (1 5/8) 42.862 (1 11/16) 44.45 (1 3/4)	137	105	22	18	38	16	52.2	49.2	19	M14 (W 1/2)	UC 209 209-26 209-27 209-28	F 209	2.36

Square Flange Units

Unit No.	Shaft Dia. (mm)	Dimensions (mm)									Bolt Used	Bearing No.	Housing No.	Weight (kg)
		a	e	l	g	L	s	z	Bi	n				
UCF 210 210-30 210-31	50 47.625 (1 7/8) 49.212 (1 15/16)	143	111	22	18	40	16	54.6	51.6	19	M14 (W 1/2)	UC 210 210-30 210-31	F 210	2.64
UCF 211 211-32 211-34 211-35	55 50.8 (2) 53.975 (2 1/8) 55.562 (2 3/16)	162	130	25	20	43	19	58.4	55.6	22.2	M16 (W 5/8)	UC 211 211-32 211-34 211-35	F 211	3.51
UCF 212 212-36 212-38 212-39	60 57.15 (2 1/4) 60.325 (2 3/8) 61.912 (2 7/16)	175	143	29	20	48	19	68.7	65.1	25.4	M16 (W 5/8)	UC 212 212-36 212-38 212-39	F 212	4.8
UCF 213 213-40	65 63.5 (2 1/2)	187	149	30	20	50	19	69.7	65.1	25.4	M16 (W 5/8)	UC 213 213-40	F 213	5.8
UCF 214 214-44	70 69.85 (2 3/4)	193	152	31	24	54	19	75.4	74.6	30.2	M16 (W 5/8)	UC 214 214-44	F 214	6.5
UCF 215 215-47 215-48	75 74.613 (2 15/16) 76.2 (3)	200	159	34	24	56	19	78.5	77.8	33.3	M16 (W 5/8)	UC 215 215-47 215-48	F 215	7.4
UCF 216 216-50	80 79.375 (3 1/8)	208	165	34	24	58	23	83.3	82.6	33.3	M20 (W 3/4)	UC 216 216-50	F 216	7.8
UCF 217 217-52	85 82.55 (3 1/4)	220	175	36	26	63	23	87.6	85.7	34.1	M20 (W 3/4)	UC 217 217-52	F 217	9.3
UCF 218 218-56	90 88.9 (3 1/2)	235	187	40	26	68	23	96.3	96	39.7	M20 (W 3/4)	UC 218 218-56	F 218	11.3

Two-Bolt Flange Units

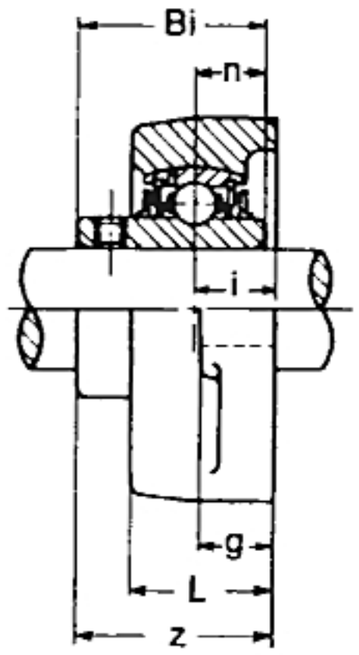

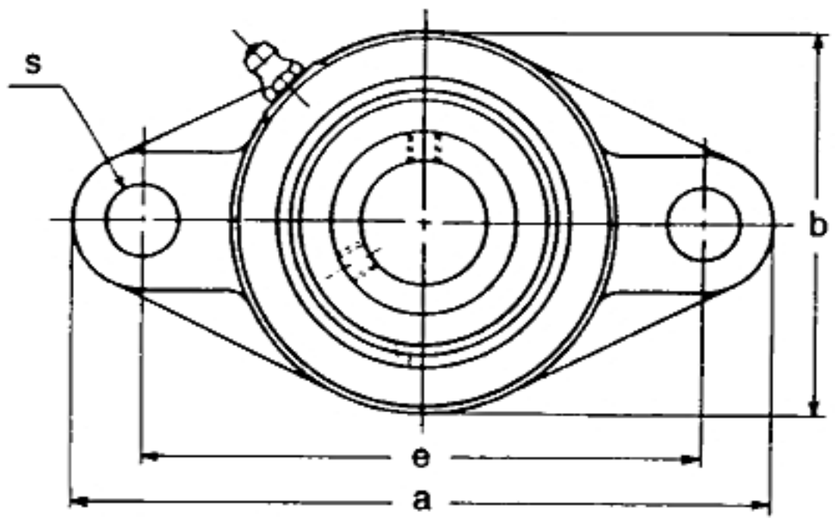

Unit No.	Shaft Dia. (mm)	Dimensions (mm)										Bolt Used	Bearing No.	Housing No.	Weight (kg)
		a	e	l	g	L	s	b	z	Bi	n				
UCFL 201 201-8	12 12.7 (1/2)	113	90	15	12	25.5	12	60	33.3	31	12.7	M10 (W 3/8)	UC 201 201-8	FL 204	0.51
UCFL 202 202-10	15 15.875 (5/8)	113	90	15	12	25.5	12	60	33.3	31	12.7	M10 (W 3/8)	UC 202 202-10	FL 204	0.48
UCFL 203	17	113	90	15	12	25.5	12	60	33.3	31	12.7	M10 (W 3/8)	UC 203	FL 204	0.50
UCFL 204 204-12	20 19.05 (3/4)	113	90	15	12	25.5	12	60	33.3	31	12.7	M10 (W 3/8)	UC 204 204-12	FL 204	0.49
UCFL 205 205-14 205-15 205-16	25 22.225 (7/8) 23.812 (15/16) 25.4 (1)	130	99	16	14	27	16	68	35.7	34	14.3	M14 (W 1/2)	UC 205 205-14 205-15 205-16	FL 205	0.65
UCFL 206 206-18 206-19	30 28.575 (1 1/8) 30.162 (1 3/16)	148	117	18	14	31	16	80	40.2	38.1	15.9	M14 (W 1/2)	UC 206 206-18 206-19	FL 206	0.98
UCFL 207 207-20 207-21 207-22 207-23	35 31.75 (1 1/4) 33.338 (1 5/16) 34.925 (1 3/8) 36.512 (1 7/16)	161	130	19	16	34	16	90	44.4	42.9	17.5	M14 (W 1/2)	UC 207 207-20 207-21 207-22 207-23	FL 207	1.25
UCFL 208 208-24 208-25	40 38.1 (1 1/2) 39.668 (1 9/16)	175	144	21	16	36	16	100	51.2	49.2	19	M14 (W 1/2)	UC 208 208-24 208-25	FL 208	1.65
UCFL 209 209-26 209-27 209-28	45 41.275 (1 5/8) 42.862 (1 11/16) 44.45 (1 3/4)	188	148	22	18	38	19	108	52.2	49.2	19	M16 (W 5/8)	UC 209 209-26 209-27 209-28	FL 209	1.95

Two-Bolt Flange Units

Unit No.	Shaft Dia. (mm)	Dimensions (mm)										Bolt Used	Bearing No.	Housing No.	Weight (kg)
		a	e	l	g	L	s	b	z	Bi	n				
UCFL 210 210-30 210-31	50 47.625 (1 7/8) 49.212 (1 15/16)	197	157	22	18	40	19	115	54.6	51.6	19	M16 (W 5/8)	UC 210 210-30 210-31	FL 210	2.25
UCFL 211 211-32 211-34 211-35	55 50.8 (2) 53.975 (2 1/8) 55.562 (2 3/16)	224	184	25	20	43	19	130	58.4	55.6	22.2	M16 (W 5/8)	UC 211 211-32 211-34 211-35	FL 211	3.3
UCFL 212 212-36 212-38 212-39	60 57.15 (2 1/4) 60.325 (2 3/8) 61.912 (2 7/16)	250	202	29	20	48	23	140	68.7	65	25.4	M20 (W 3/4)	UC 212 212-36 212-38 212-39	FL 212	4.25
UCFL 213 213-40	65 63.5 (2 1/2)	258	210	30	20	50	23	155	69.7	65	25.4	M20 (W 3/4)	UC 213 213-40	FL 213	5.3
UCFL 214 214-44	70 69.85 (2 3/4)	265	216	31	24	54	23	160	75.4	74.6	30.2	M20 (W 3/4)	UC 214 214-44	FL 214	6
UCFL 215 215-47 215-48	75 74.613 (2 15/16) 76.2 (3)	275	225	34	24	56	23	165	78.5	77.8	33.3	M20 (W 3/4)	UC 215 215-47 215-48	FL 215	6.5
UCFL 216 216-50	80 79.375 (3 1/8)	290	233	34	24	58	25	180	83.3	82.6	33.3	M22 (W 7/8)	UC 216 216-50	FL 216	8
UCFL 217 217-52	85 82.55 (3 1/4)	305	248	36	26	63	25	190	87.6	85.7	34.1	M22 (W 7/8)	UC 217 217-52	FL 217	9.5
UCFL 218 218-56	90 88.9 (3 1/2)	320	265	40	26	68	25	205	96.3	96	39.7	M22 (W 7/8)	UC 218 218-56	FL 218	11.9

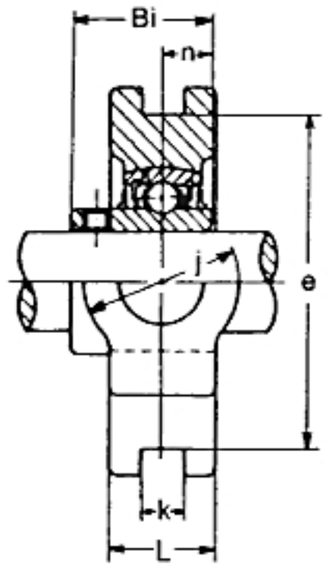

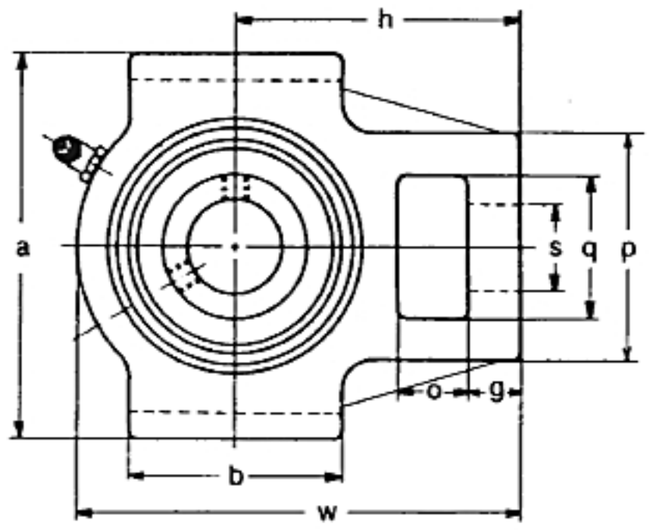

Unit No.	Shaft Dia. (mm)	Dimensions (mm)															Bearing No.	Housing No.	Weight (kg)
		o	g	p	q	s	b	k	e	a	w	j	L	h	Bi	n			
UCT 201 201-8	12 12.7 (1/2)	16	10	51	32	19	51	12	76	89	94	32	21	61	31	12.7	UC 201 201-8	T 204	0.82
UCT 202 202-8	15 15.875 (5/8)	16	10	51	32	19	51	12	76	89	94	32	21	61	31	12.7	UC 202 202-8	T 204	0.81
UCT 203	17	16	10	51	32	19	51	12	76	89	94	32	21	61	31	12.7	UC 203	T 204	0.80
UCT 204 204-12	20 19.05 (3/4)	16	10	51	32	19	51	12	76	89	94	32	21	61	31	12.7	UC 204 204-12	T 204	0.78
UCT 205 205-14 205-15 205-16	25 22.225 (7/8) 23.812 (15/16) 25.4 (1)	16	10	51	32	19	51	12	76	89	97	32	24	62	34	14.3	UC 205 205-14 205-15 205-16	T 205	0.82
UCT 206 206-18 206-19	30 28.575 (1 1/8) 30.162 (1 3/16)	16	10	56	37	22	57	12	89	102	113	37	28	70	38.1	15.9	UC 206 206-18 206-19	T 206	1.28
UCT 207 207-20 207-21 207-22 207-23	35 31.75 (1 1/4) 33.338 (1 5/16) 34.925 (1 3/8) 36.512 (1 7/16)	16	13	64	37	22	64	12	89	102	129	37	30	78	42.9	17.5	UC 207 207-20 207-21 207-22 207-23	T 207	1.7
UCT 208 208-24 208-25	40 38.1 (1 1/2) 39.688 (1 9/16)	19	16	83	49	29	83	16	102	114	114	49	33	88	49.2	19	UC 208 208-24 208-25	T 208	2.42
UCT 209 209-26 209-57 209-28	45 41.275 (1 5/8) 42.862 (1 11/16) 44.45 (1 3/4)	19	16	83	49	29	83	16	102	114	114	49	35	87	49.2	19	UC 209 209-26 209-57 209-28	T 209	2.52

Take-Up Units

Unit No.	Shaft Dia. (mm)	Dimensions (mm)															Bearing No.	Housing No.	Weight (kg)
		o	g	p	q	s	b	k	e	a	w	j	L	h	Bi	n			
UCT 210 210-30 210-31	50 47.625 (1 7/8) 49.212 (1 15/16)	19	16	83	49	29	86	16	102	117	149	49	37	90	51.6	19	UC 210 210-30 210-31	T 210	2.7
UCT 211 211-32 211-34 211-35	55 50.8 (2) 53.975 (2 1/8) 55.562 (2 3/16)	25	19	102	64	35	95	22	130	146	171	64	38	106	55.6	22.2	UC 211 211-32 211-34 211-35	T 211	4.1
UCT 212 212-36 212-38 212-39	60 57.15 (2 1/4) 60.325 (2 3/8) 61.912 (2 7/16)	32	19	102	64	35	102	22	130	146	194	64	42	119	65.1	25.4	UC 212 212-36 212-38 212-39	T 212	5.2
UCT 213 213-40	65 63.5 (2 1/2)	32	21	111	70	41	121	26	151	167	224	70	44	137	65.1	25.4	UC 213 213-40	T 213	7.05
UCT 214 214-44	70 69.85 (2 3/4)	32	21	111	70	41	121	26	151	167	224	70	46	137	74.6	30.2	UC 214 214-44	T 214	7.1
UCT 215 215-47 215-48	75 74.613 (2 15/16) 76.2 (3)	32	21	111	70	41	121	26	151	167	232	70	48	140	77.8	33.3	UC 215 215-47 215-48	T 215	7.5
UCT 216 216-50	80 79.375 (3 1/8)	32	21	111	70	41	121	26	165	184	235	70	51	140	82.6	33.3	UC 216 216-50	T 216	8.5
UCT 217 217-52	85 82.55 (3 1/4)	38	29	124	73	48	157	30	173	198	260	73	54	162	85.7	34.1	UC 217 217-52	T 217	11.2

Flange Cartridge Units

UCFC 200 Series

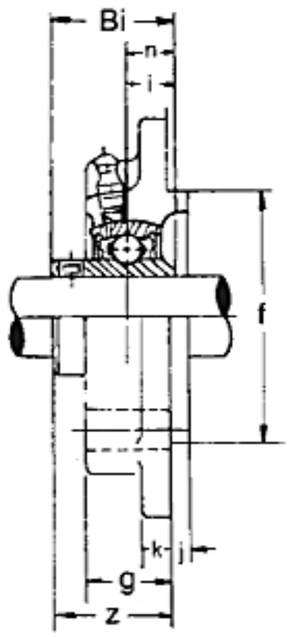

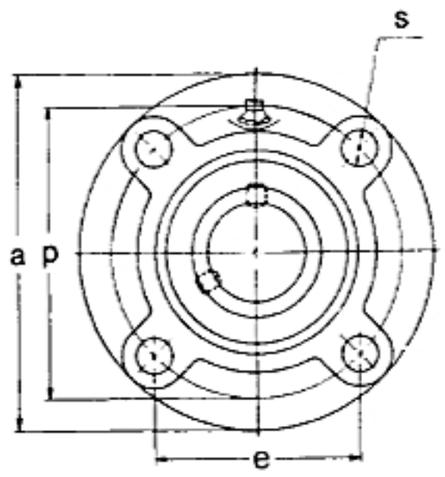

Unit No.	Shaft Dia. (mm)	Dimensions (mm)												Bolt Used	Bearing No.	Housing No.	Weight (kg)
		a	p	e	l	s	j	k	g	f	z	Bi	n				
UCFL 201 201-8	12 12.7 (1/2)	100	78	55.1	10	12	5	7	20.5	62	28.3	31	12.7	M10 (W 3/8)	UC 201 201-8	FC 204	0.89
UCFL 202 202-10	15 15.875 (5/8)	100	78	55.1	10	12	5	7	20.5	62	28.3	31	12.7	M10 (W 3/8)	UC 202 202-10	FC 204	0.87
UCFL 203	17	100	78	55.1	10	12	5	7	20.5	62	28.3	31	12.7	M10 (W 3/8)	UC 203	FC 204	0.86
UCFL 204 204-12	20 19.05 (3/4)	100	78	55.1	10	12	5	7	20.5	62	28.3	31	12.7	M10 (W 3/8)	UC 204 204-12	FC 204	0.84
UCFL 205 205-16	25 25.4 (1)	115	90	63.6	10	12	6	7	21	70	29.7	34	14.3	M10 (W 3/8)	UC 205 205-16	FC 205	1.1
UCFL 206 206-18	30 28.575 (1 1/8)	125	100	70.7	10	12	8	8	23	80	32.2	38.1	15.9	M10 (W 3/8)	UC 206 206-18	FC 206	1.5
UCFL 207 207-20	35 31.75 (1 1/4)	135	110	77.8	11	14	8	9	26	90	36.4	42.9	17.5	M12 (W 1/2)	UC 207 207-20	FC 207	1.7
UCFL 208 208-24	40 38.1 (1 1/2)	145	120	84.8	11	14	10	9	26	100	41.2	49.2	19	M12 (W 1/2)	UC 208 208-24	FC 208	2.1
UCFL 209 209-28	45 44.45 (1 3/4)	160	132	93.3	10	16	12	14	26	105	40.2	49.2	19	M12 (W 1/2)	UC 209 209-28	FC 209	3
UCFL 210 210-30	50 47.625 (1 7/8)	165	138	97.6	10	16	12	14	28	110	42.6	51.6	19	M12 (W 1/2)	UC 210 210-30	FC 210	3.1
UCFL 211 211-32	55 50.8 (2)	185	150	106.1	13	19	12	15	31	125	46.4	55.6	22.2	M16 (W 5/8)	UC 211 211-32	FC 211	3.9
UCFL 212 212-36	60 57.15 (2 1/4)	195	160	113.1	17	19	12	15	36	135	56.7	65.1	25.4	M16 (W 5/8)	UC 212 212-36	FC 212	4.4
UCFL 213 213-40	65 63.5 (2 1/2)	205	170	120.2	16	19	14	15	36	145	55.7	65.1	25.4	M16 (W 5/8)	UC 213 213-40	FC 213	5.3
UCFL 214 214-44	70 69.85 (2 3/4)	215	177	125.1	17	19	14	18	40	150	61.4	74.6	30.2	M16 (W 5/8)	UC 214 214-44	FC 214	6.8
UCFL 215 215-48	75 76.2 (3)	220	184	130.1	18	19	16	18	40	150	62.5	77.8	33.3	M16 (W 5/8)	UC 215 215-48	FC 215	7.4

Pedestal Pillow Blocks

UCPH 200 Series

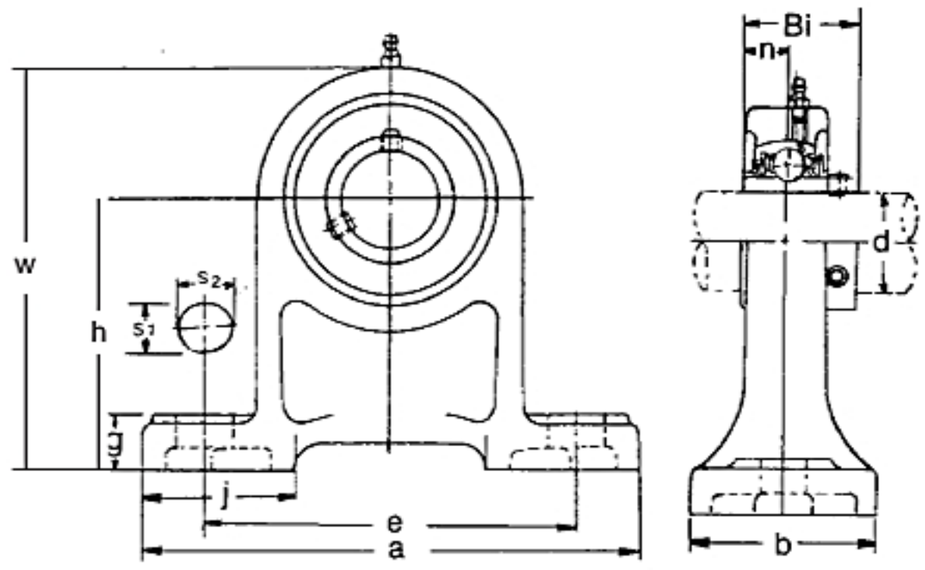

Unit No.	Shaft Dia. (mm)	Dimensions (mm)											Bolt Used	Bearing No.	Housing No.	Weight (kg)
		h	a	e	b	s_1	s_2	g	w	j	Bi	n				
UCPH 201 201-8	12 12.7 (1/2)	70	127	95	40	13	19	15	101	46	31	12.7	M10 (W 3/8)	UC 201 201-8	PH 204	0.96
UCPH 202 202-10	15 15.875 (5/8)	70	127	95	40	13	19	15	101	46	31	12.7	M10 (W 3/8)	UC 202 202-10	PH 204	0.94
UCPH 203	17	70	127	95	40	13	19	15	101	46	31	12.7	M10 (W 3/8)	UC 203	PH 204	0.93
UCPH 204 204-12	20 19.05 (3/4)	70	127	95	40	13	19	15	101	46	31	12.7	M10 (W 3/8)	UC 204 204-12	PH 204	0.91
UCPH 205 205-14 205-15 205-16	25 22.225 (7/8) 23.812 (15/16) 25.4 (1)	80	140	105	50	13	19	16	114	49	34	14.3	M10 (W 3/8)	UC 205 205-14 205-15 205-16	PH 205	1.2
UCPH 206 206-18 206-19	30 28.575 (1 1/8) 30.162 (1 3/6)	90	165	121	50	17	21	18	130	56	38.1	15.9	M14 (W 1/2)	UC 206 206-18 206-19	PH 206	1.6
UCPH 207 207-20 207-21 207-22 207-23	35 31.75 (1 1/4) 33.338 (1 5/16) 34.925 (1 3/8) 36.512 (1 7/16)	95	167	127	60	17	21	18	140	54	42.9	17.5	M14 (W 1/2)	UC 207 207-20 207-21 207-22 207-23	PH 207	2.0
UCPH 208 208-24 208-25	40 38.1 (1 1/2) 39.688 (1 9/16)	100	184	137	70	17	21	20	150	57	49.2	19	M14 (W 1/2)	UC 208 208-24 208-25	PH 208	2.7
UCPH 209 209-26 209-27 209-28	45 41.275 (1 5/8) 42.862 (1 11/16) 44.45 (1 3/4)	105	190	146	70	17	21	20	158	58	49.2	19	M14 (W 1/2)	UC 209 209-26 209-27 209-28	PH 209	3.0
UCPH 210 210-30 210-31	50 47.625 (1 7/8) 49.212 (1 15/16)	110	206	159	70	20	22	22	165	65	51.6	19	M16 (W 5/8)	UC 210 210-30 210-31	PH 210	3.5

Tapped Base Pillow Block

UCPA 200 Series

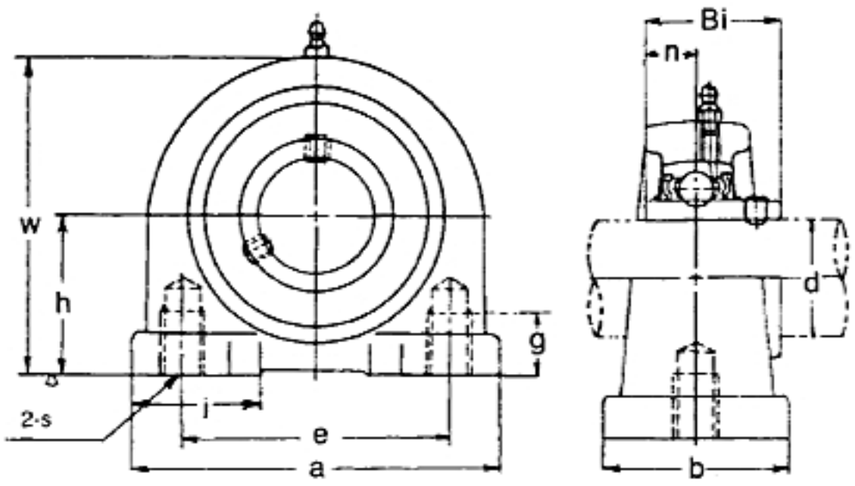

Unit No.	Shaft Dia. (mm)	Dimensions (mm)										Bolt Used	Housing No.	Weight (kg)
		h	a	e	b	s	w	j	g	Bi	n			
UCPA 201 201-8	12 12.7 (1/2)	30.2	76	52	40	M10 x 1.5	62	27	13	31	12.7	UC 201 201-8	PA 204	0.64
UCPA 202 202-10	15 15.875 (5/8)	30.2	76	52	40	M10 x 1.5	62	27	13	31	12.7	UC 202 202-10	PA 204	0.62
UCPA 203	17	30.2	76	52	40	M10 x 1.5	62	27	13	31	12.7	UC 203	PA 204	0.61
UCPA 204 204-12	20 19.05 (3/4)	30.2	76	52	40	M10 x 1.5	62	27	13	31	12.7	UC 204 204-12	PA 204	0.59
UCPA 205 205-14 205-15 205-16	25 22.225 (7/8) 23.812 (15/16) 25.4 (1)	36.5	84	56	45	M10 x 1.5	72	30	13	34	14.3	UC 205 205-14 205-15 205-16	PA 205	0.83
UCPA 206 206-18 206-19	30 28.575 (1 1/8) 30.162 (1 3/16)	42.9	94	66	50	M14 x 2	84	36	18	38.1	15.9	UC 206 206-18 206-19	PA 206	1.2
UCPA 207 207-20 207-21 207-22 207-23	35 31.75 (1 1/4) 33.338 (1 5/16) 34.925 (1 3/8) 36.512 (1 7/16)	47.6	110	80	55	M14 x 2	95	41	20	42.9	17.5	UC 207 207-20 207-21 207-22 207-23	PA 207	1.7
UCPA 208 208-24 208-25	40 38.1 (1 1/2) 39.688 (1 9/16)	49.2	116	84	58	M14 x 2	100	41	20	49.2	19	UC 208 208-24 208-25	PA 208	2.0
UCPA 209 209-26 209-27 209-28	45 41.275 (1 5/8) 42.862 (1 11/16) 44.45 (1 3/4)	54.2	120	90	60	M14 x 2	108	42	25	49.2	19	UC 209 209-26 209-27 209-28	PA 209	2.2
UCPA 210 210-30 210-31	50 47.625 (1 7/8) 49.212 (1 15/16)	57.2	130	94	64	M16 x 2	116	47	25	51.6	19	UC 210 210-30 210-31	PA 210	2.8

Nanger Bearing Units

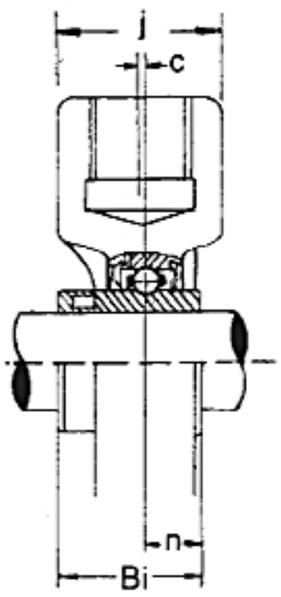

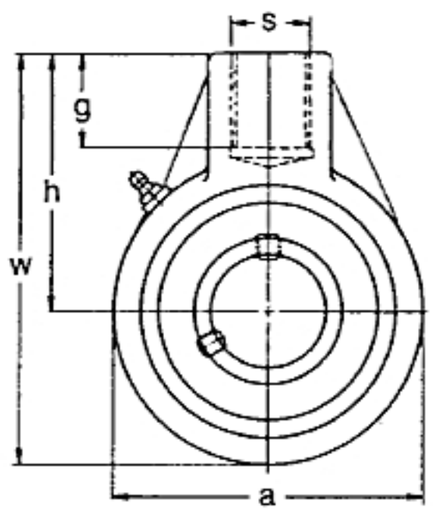

Unit No.	Shaft Dia. (mm)	Dimensions (mm)									Bearing No.	Housing No.	Weight (kg)
		a	w	c	h	j	g	s(in)	Bi	n			
UCHA 201 201-8	12 12.7 (1/2)	64	96	0	64	40	19	PF3/4	31	12.7	UC 201 201-8	HA 204	0.77
UCHA 202 202-10	15 15.875 (5/8)	64	96	0	64	40	19	PF3/4	31	12.7	UC 202 202-10	HA 204	0.75
UCHA 203	17	64	96	0	64	40	19	PF3/4	31	12.7	UC 203	HA 204	0.74
UCHA 204 204-12	20 19.05 (3/4)	64	96	0	64	40	19	PF3/4	31	12.7	UC 204 204-12	HA 204	0.72
UCHA 205 205-16	25 25.4 (1)	70	99	0	64	40	19	PF3/4	34	14.3	UC 205 205-16	HA 205	0.87
UCHA 206 206-18	30 28.575 (1 1/8)	80	104	0	64	40	19	PF3/4	38.1	15.9	UC 206 206-18	HA 206	0.83
UCHA 207 207-20	35 31.75 (1 1/4)	92	116	0	70	40	19	PF3/4	42.9	17.5	UC 207 207-20	HA 207	1.2
UCHA 208 208-24	40 38.1 (1 1/2)	96	121	2	73	40	19	PF3/4	49.2	19	UC 208 208-24	HA 208	1.3
UCHA 209 209-28	45 44.45 (1 3/4)	108	136	4	82	48	21	PF1	49.2	19	UC 209 209-28	HA 209	1.7
UCHA 210 210-30	50 47.625 (1 7/8)	114	140	5	83	48	21	PF1	51.6	19	UC 210 210-30	HA 210	2.1
UCHA 211 211-32	55 50.8 (2)	126	150	7	87	60	25	PF1 1/4	55.6	22.2	UC 211 211-32	HA 211	2.8
UCHA 212 212-32	60 57.15 (2 1/4)	142	173	9	102	60	28	PF1 1/4	65.1	25.4	UC 212 212-32	HA 212	3.9
UCHA 213 213-40	65 63.5 (2 1/2)	166	200	9.5	117	70	32	PF1 1/2	65.1	25.4	UC 213 213-40	HA 213	5.8
UCHA 214 214-44	70 69.85 (2 3/4)	166	200	9.5	117	70	32	PF1 1/2	74.6	30.2	UC 214 214-44	HA 214	5.9
UCHA 215 215-48	75 76.2 (3)	166	200	9.5	117	70	32	PF1 1/2	77.8	33.3	UC 215 215-48	HA 215	5.6

Flange Bracket Units

UCFK 200 - UCFB 200 Series

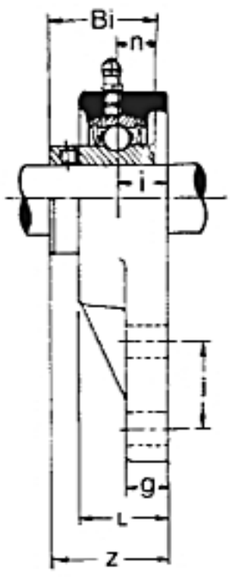

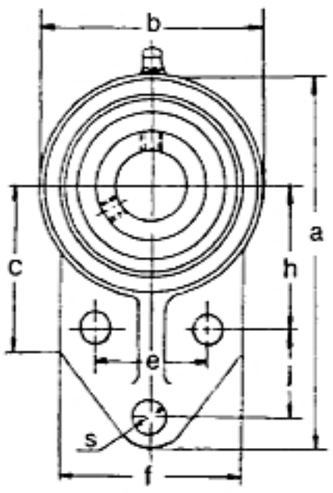

Unit No.	Shaft Dia. (mm)	Dimensions (mm)														Bolt Used	Bearing No.	Housing No.	Weight (kg)
		a	h	e	j	i	g	L	c	s	b	f	z	Bi	n				
UCFK 201 201-8	12 12.7 (1/2)	110	42	32	27	15	13	25.5	52	10	62	52	33.3	31	12.7	M8 (W 5/16)	UC 201 201-8	FK 204	0.6
UCFK 202 202-10	15 15.875 (5/8)	110	42	32	27	15	13	25.5	52	10	62	52	33.3	31	12.7	M8 (W 5/16)	UC 202 202-10	FK 204	0.58
UCFK 203	17	110	42	32	27	15	13	25.5	52	10	62	52	33.3	31	12.7	M8 (W 5/16)	UC 203	FK 204	0.57
UCFK 204 204-12	20 19.05 (3/4)	110	42	32	27	15	13	25.5	52	10	62	52	33.3	31	12.7	M8 (W 5/16)	UC 204 204-12	FK 204	0.55
UCFK 205 205-14 205-15 205-16	25 22.225 (7/8) 23.812 (15/16) 25.4 (1)	116	45	34	27	16	13	27	52	10	68	56	35.7	34	14.3	M8 (W 5/16)	UC 205 205-14 205-15 205-16	FK 205	0.66
UCFK 206 206-18 206-19	30 28.575 (1 1/8) 30.162 (1 3/16)	130	50	40	29	18	13	31	55	10	78	65	40.2	38.1	15.9	M8 (W 5/16)	UC 206 206-18 206-19	FK 206	0.93
UCFK 207 207-20 207-21 207-22 207-23	35 31.75 (1 1/4) 33.338 (1 5/16) 34.925 (1 3/8) 36.512 (1 7/16)	144	55	46	32	19	15	34	62	10	90	70	44.4	42.9	17.5	M8 (W 5/16)	UC 207 207-20 207-21 207-22 207-23	FK 207	1.3
UCFK 208 208-24 208-25	40 38.1 (1 1/2) 39.688 (1 9/16)	164	60	50	41	21	16	36	72	12	100	78	51.2	49.2	19	M10 (W 3/8)	UC 208 208-24 208-25	FK 208	1.7
UCFK 209 209-26 209-27 209-28	45 41.275 (1 5/8) 42.862 (1 11/16) 44.45 (1 3/4)	174	65	54	43	22	18	38	76	12	106	80	52.2	49.2	19	M10 (W 3/8)	UC 209 209-26 209-27 209-28	FK 209	1.9
UCFK 210 210-30 210-31	50 47.625 (1 7/8) 49.212 (1 15/16)	184	68	58	46	22	18	40	82	12	112	86	54.6	51.6	19	M10 (W 3/8)	UC 210 210-30 210-31	FK 210	2.2

Flange Bracket Units

UCFA 200 Series

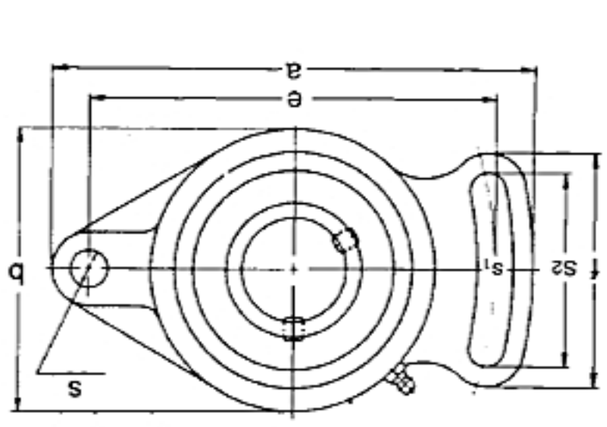

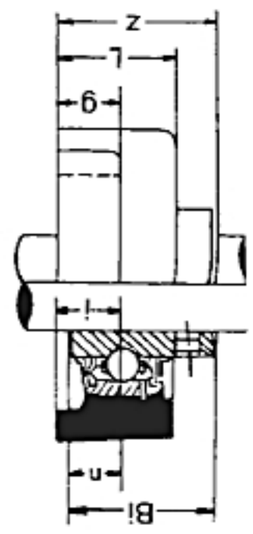

Unit No.	Shaft Dia. (mm)	Dimensions (mm)													Bolt Used	Bearing No.	Housing No.	Weight (kg)
		a	e	i	g	L	s	s_1	s_2	b	f	z	Bi	n				
UCFA 201 201-8	12 12.7 (1/2)	102	78	15	12	25.5	10	10	40	60	54	33.3	31	12.7	M8 (W 5/16)	UC 201 201-8	FA 204	0.5
UCFA 202 202-10	15 15.875 (5/8)	102	78	15	12	25.5	10	10	40	60	54	33.3	31	12.7	M8 (W 5/16)	UC 202 202-10	FA 204	0.49
UCFA 203	17	102	78	15	12	25.5	10	10	40	60	54	33.3	31	12.7	M8 (W 5/16)	UC 203	FA 204	0.48
UCFA 204 204-12	20 19.05 (3/4)	102	78	15	12	25.5	10	10	40	60	54	33.3	31	12.7	M8 (W 5/16)	UC 204 204-12	FA 204	0.46
UCFA 205 205-14 205-15 205-16	25 22.225 (7/8) 23.812 (15/16) 25.4 (1)	125	98	16	14	27	12	13	51	68	65	35.7	34	14.3	M10 (W 3/8)	UC 205 205-14 205-15 205-16	FA 205	0.66
UCFA 206 206-18 206-19	30 28.575 (1 1/8) 30.162 (1 3/16)	144	117	18	14	31	12	13	58	80	72	40.2	38.1	15.9	M10 (W 3/8)	UC 206 206-18 206-19	FA 206	1
UCFA 207 207-20 207-21 207-22	35 31.75 (1 1/4) 33.338 (1 5/16) 34.925 (1 3/8)	161	130	19	16	34	15	15	66	90	82	44.4	42.9	17.5	M12 (W 1/2)	UC 207 207-20 207-21 207-22	FA 207	1.4
UCFA 208 208-24 208-25	40 38.1 (1 1/2) 39.688 (1 9/16)	175	144	21	16	36	15	15	71	100	87	51.2	49.2	19	M12 (W 1/2)	UC 208 208-24 208-25	FA 208	1.7
UCFA 209 209-26 209-27 209-28	45 41.275 (1 5/8) 42.862 (1 11/16) 44.45 (1 3/4)	181	148	22	18	38	15	15	72	108	90	52.2	49.2	19	M12 (W 1/2)	UC 209 209-26 209-27 209-28	FA 209	2
UCFA 210 210-30	50 47.625 (1 7/8)	190	157	22	18	40	15	15	76	115	94	54.6	51.6	19	M12 (W 1/2)	UC 210 210-30	FA 210	2.4
UCFA 211 211-32	55 50.8 (2)	219	184	25	20	43	16	17	86	130	104	58.4	55.6	22.2	M14 (W 1/2)	UC 211 211-32	FA 211	3.4

Cylindrical Cartridce Units

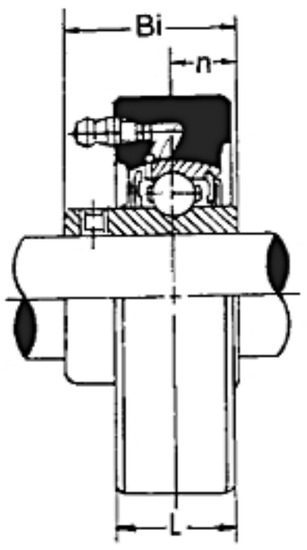

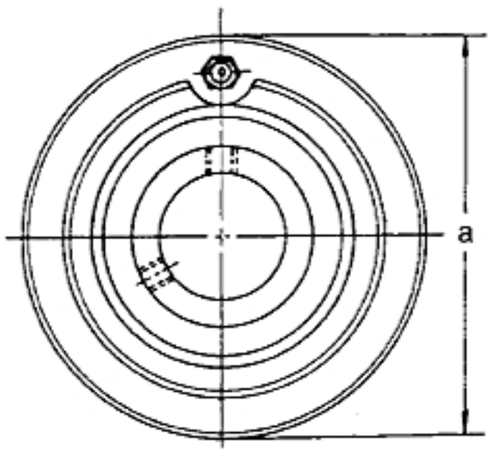

Unit No.	Shaft Dia. (mm)	Dimensions (mm)				Bearing No.	Housing No.	Weight (kg)
		a	L	Bi	n			
UCC 201 201-8	12 12.7 (1/2)	72	20	31	12.7	UC 201 201-8	C 204	0.54
UCC 202 202-10	15 15.875 (5/8)	72	20	31	12.7	UC 202 202-10	C 204	0.52
UCC 203	17	72	20	31	12.7	UC 203	C 204	0.51
UCC 204 204-12	20 19.05 (3/4)	72	20	31	12.7	UC 204 204-12	C 204	0.49
UCC 205 205-16	25 25.4 (1)	80	22	34	14.3	UC 205 205-16	C 205	0.65
UCC 206 206-18	30 28.575 (1 1/8)	85	27	38.1	15.9	UC 206 206-18	C 206	0.82
UCC 207 207-20	35 31.75 (1 1/4)	90	28	42.9	17.5	UC 207 207-20	C 207	0.93
UCC 208 208-24	40 38.1 (1 1/2)	100	30	49.2	19	UC 208 208-24	C 208	1.2
UCC 209 209-28	45 44.45 (1 3/4)	110	31	49.2	19	UC 209 209-28	C 209	1.5
UCC 210 210-30	50 47.625 (1 7/8)	120	33	51.6	19	UC 210 210-30	C 210	1.9
UCC 211 211-32	55 50.8 (2)	125	35	55.6	22.2	UC 211 211-32	C 211	2.1
UCC 212 212-36	60 57.15 (2 1/4)	130	38	65.1	25.4	UC 212 212-36	C 212	2.5
UCC 213 213-40	65 63.5 (2 1/2)	140	40	65.1	25.4	UC 213 213-40	C 213	3

UKP + H (Adapter)

UKP 200 Series + H (mm) + HS ($\frac{n}{8}$)" + HE (in) + HA ($\frac{n}{16}$)"

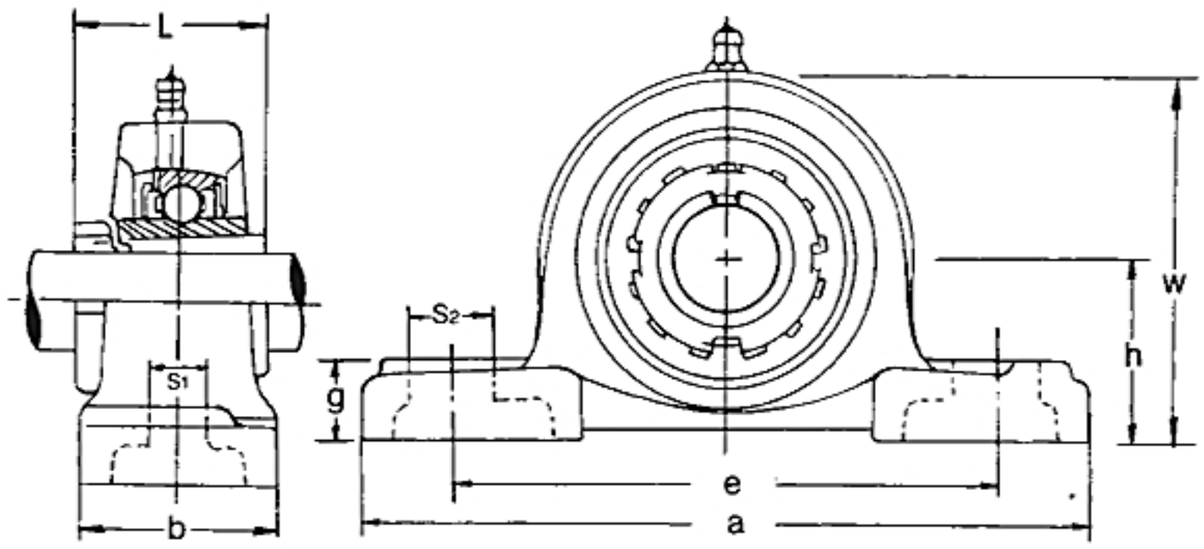

Unit No.	Shaft Dia. (mm)	Dimensions (mm)									Adapter No.	Housing No.	Weight (kg)
		h	a	e	b	s_1	s_2	g	w	L			
UKP 205 + H 2305 + HE 2305	20 19.05 (3/4)	36.5	140	105	38	13	16	16	70	35	H 2305 HE 2305	P 205	0.84
UKP 206 + H 2306 + HE 2306	25 25.4 (1)	42.9	165	121	48	17	21	18	83	38	H 2306 HE 2306	P 206	1.4
UKP 207 + H 2307	30	47.6	167	127	48	17	21	19	94	43	H 2307	P 207	1.6
UKP 208 + H 2308 + HE 2308	35 31.75 (1 1/4)	49.2	184	137	54	17	25	19	100	46	H 2308 HE 2308	P 208	2.1
UKP 209 + H 2309 + HE 2309	40 38.1 (1 1/2)	54	190	146	54	17	22	20	108	50	H 2309 HE 2309	P 209	2.4
UKP 210 + H 2310 + HE 2310	45 44.45 (1 3/4)	57.2	206	159	60	20	25	22	114	55	H 2310 HE 2310	P 210	2.8
UKP 211 + H 2311 + HE 2311	50 50.8 (2)	63.5	219	171	60	20	25	22	126	59	H 2311 HE 2311	P 211	3.4
UKP 212 + H 2312	55	69.8	241	184	70	20	25	25	138	62	H 2312	P 212	4.8
UKP 213 + H 2313 + HE 2313	60 57.15 (2 1/4)	76.2	265	203	70	25	29	27	150	65	H 2313 HE 2313	P 213	5.7
UKP 215 + H 2315 + HE 2315	65 63.5 (2 1/2)	82.6	275	217	74	25	31	28	163	73	H 2315 HE 2315	P 215	8.3
UKP 216 + H 2316 + HE 2316	70 69.85 (2 3/4)	88.9	292	232	78	25	31	30	175	78	H 2316 HE 2316	P 216	10.4
UKP 217 + H 2317 + HE 2317	75 76.2 (3)	95.2	310	247	83	25	31	32	187	82	H 2317 HE 2317	P 217	12.8
UKP 218 + H 2318	80	101.2	327	262	88	27	33	34	200	86	H 2318	P 218	15.1

MOUNTED
BALL BEARING UNITS